ID		Task Name	Duration	Leveling Delay	Start	Finish	Predecessors
1		**Palomar LGS**	**27 d?**	**0 ed**	**Wed 5/10/06**	**Fri 6/16/06**	
2		**Laser**	**27 d?**	**0 ed**	**Wed 5/10/06**	**Fri 6/16/06**	
3		**Management**	**24 d**	**0 ed**	**Wed 5/10/06**	**Wed 6/14/06**	
4		CSFL-3 strategy meeting	0 d	0 ed	Wed 5/10/06	Wed 5/10/06	
5		Review first gain module tests	0 d	0 ed	Wed 6/14/06	Wed 6/14/06	35
6		**Operations**	**19 d?**	**0 ed**	**Wed 5/10/06**	**Tue 6/6/06**	
7		**Prepare labs**	**18 d?**	**0 ed**	**Thu 5/11/06**	**Tue 6/6/06**	
8		Clean labs	2 d	0 ed	Thu 5/11/06	Fri 5/12/06	4FS+1 d
9		Order cabinets	0 d	0 ed	Fri 5/12/06	Fri 5/12/06	8
10		Install cabinets	1 d?	0 ed	Tue 6/6/06	Tue 6/6/06	9FS+15 d
11		**LBO pressurization**	**5 d?**	**0 ed**	**Wed 5/10/06**	**Tue 5/16/06**	
12		Order hardware	0 d	0 ed	Wed 5/10/06	Wed 5/10/06	4
13		Install and test bulkhead connectors	2 d?	0 ed	Mon 5/15/06	Tue 5/16/06	12FS+3 d
14		**Bandwidth**	**5 d?**	**0 ed**	**Wed 5/17/06**	**Tue 5/23/06**	
15		Test and calibrate spectrum analyzer	2 d?	0 ed	Wed 5/17/06	Thu 5/18/06	13
16		Measure CSFL linewidth	2 d?	0 ed	Fri 5/19/06	Mon 5/22/06	15
17		Document bandwidth	1 d?	0 ed	Tue 5/23/06	Tue 5/23/06	16
18		**Replace intracavity Crystals**	**5 d**	**0 ed**	**Wed 5/10/06**	**Tue 5/16/06**	
19		Request quotes	0 d	0 ed	Wed 5/10/06	Wed 5/10/06	4
20		Order crystals	0 d	0 ed	Tue 5/16/06	Tue 5/16/06	19FS+1 w
21		**Automation**	**24 d?**	**0 ed**	**Mon 5/15/06**	**Fri 6/16/06**	
22		**focus stage**	**0.5 d?**	**0 ed**	**Mon 5/15/06**	**Mon 5/15/06**	
24		**Etalon**	**12 d?**	**0 ed**	**Thu 6/1/06**	**Fri 6/16/06**	
25		Order hardware	0 d	22 ed	Thu 6/1/06	Thu 6/1/06	4
26		Install actuator	2 d?	0 ed	Thu 6/15/06	Fri 6/16/06	25FS+2 w,16
27		**CSFL-3 upgrade**	**24 d?**	**0 ed**	**Wed 5/10/06**	**Tue 6/13/06**	
28		**Caltech**	**4 d**	**0 ed**	**Wed 5/10/06**	**Mon 5/15/06**	
29		Ship gain module and saphire to Chicago	0 d	0 ed	Wed 5/10/06	Wed 5/10/06	4
30		Order hardware for cooling system	1 d	5 ed	Mon 5/15/06	Mon 5/15/06	4
31		**Chicago**	**10 d?**	**0 ed**	**Tue 5/23/06**	**Tue 6/6/06**	
32		Build first gain module	10 d?	0 ed	Tue 5/23/06	Tue 6/6/06	29FS+3 d
33		**Palomar**	**15 d?**	**0 ed**	**Tue 5/23/06**	**Tue 6/13/06**	
34		Build and test cooling system	10 d?	0 ed	Tue 5/23/06	Tue 6/6/06	30FS+1 w
35		Install and test new gain module	5 d?	0 ed	Wed 6/7/06	Tue 6/13/06	32,34,10

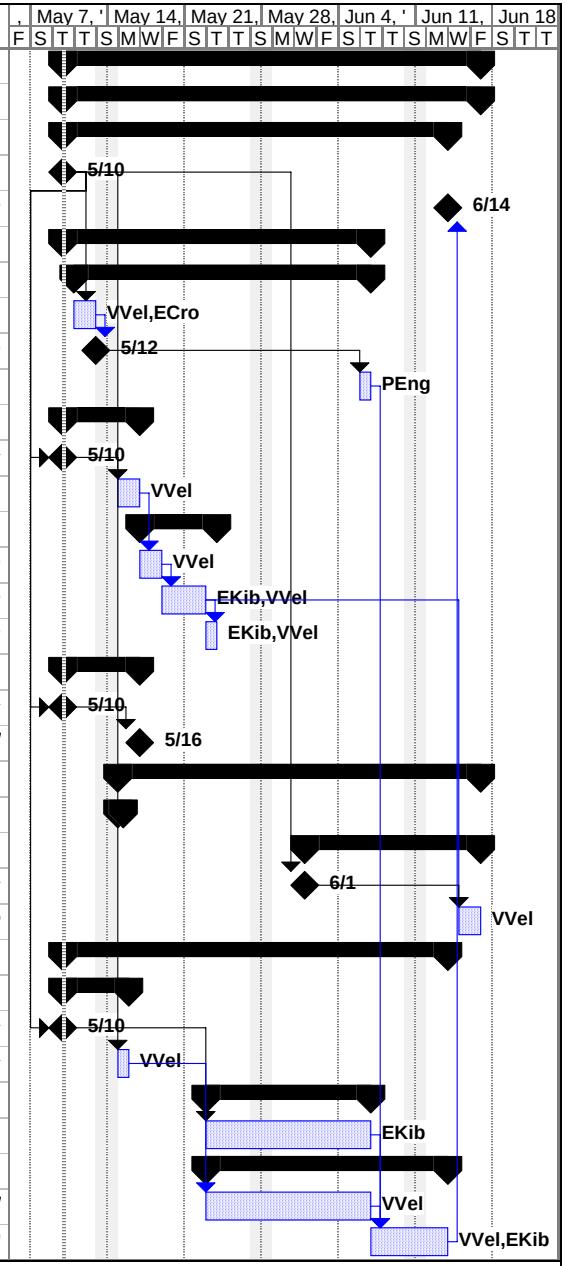

Project: laser_060510
Date: Wed 5/10/06

Task		Milestone		External Tasks	
Split		Summary		External Milestone	
Progress		Project Summary		Deadline	