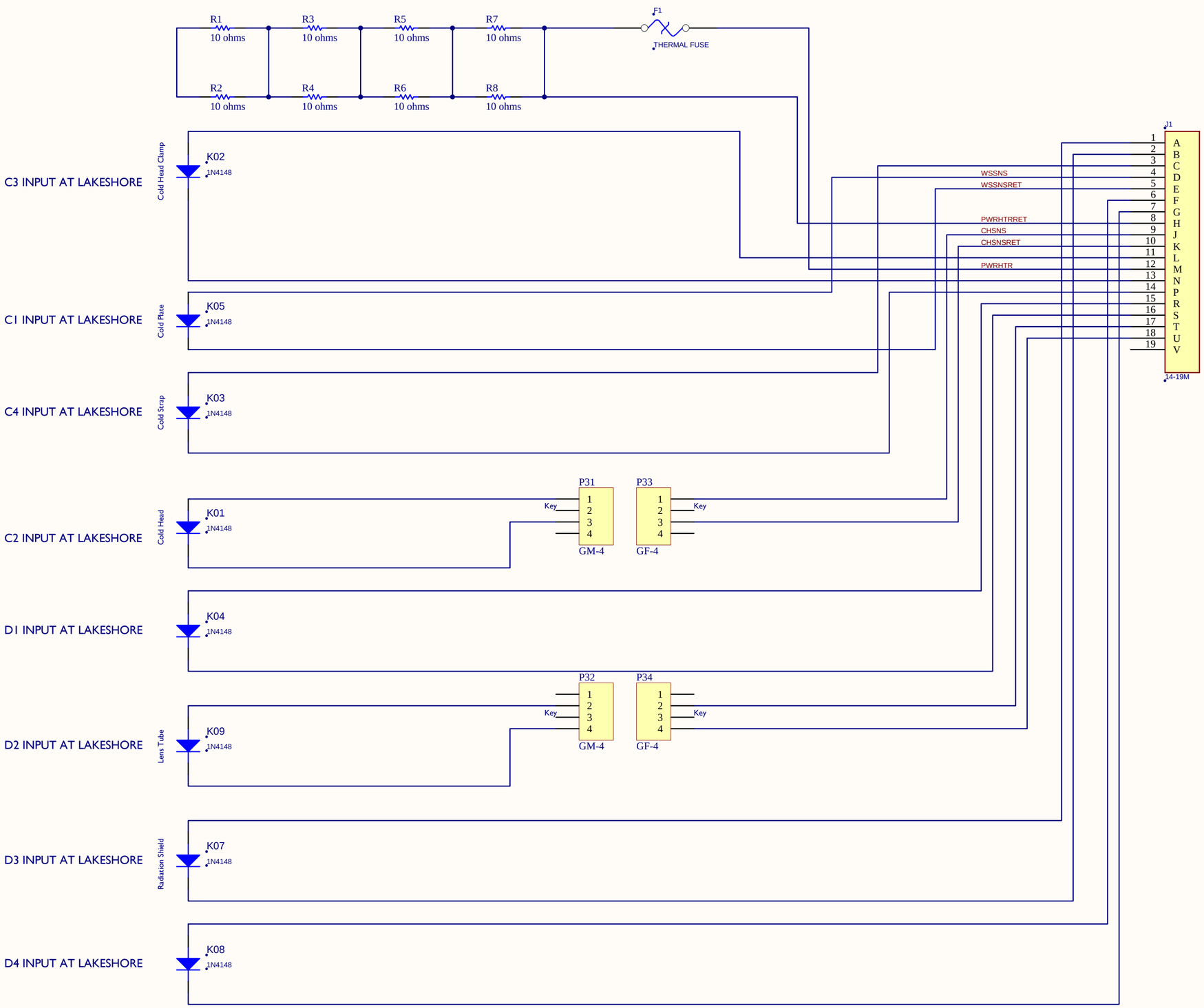

Title	TRICK Dewar Thermal Wiring		
Size: A	Document Number: NA		Rev: A
Date:		Sheet 1 of 1	