ISOMETRIC VIEW
SCALE

REVISIONS				
ZONE	REV.	DESCRIPTION	DATE	APPROVED
	A	INITIAL RELEASE	5/26/2017	Alex Delacroix

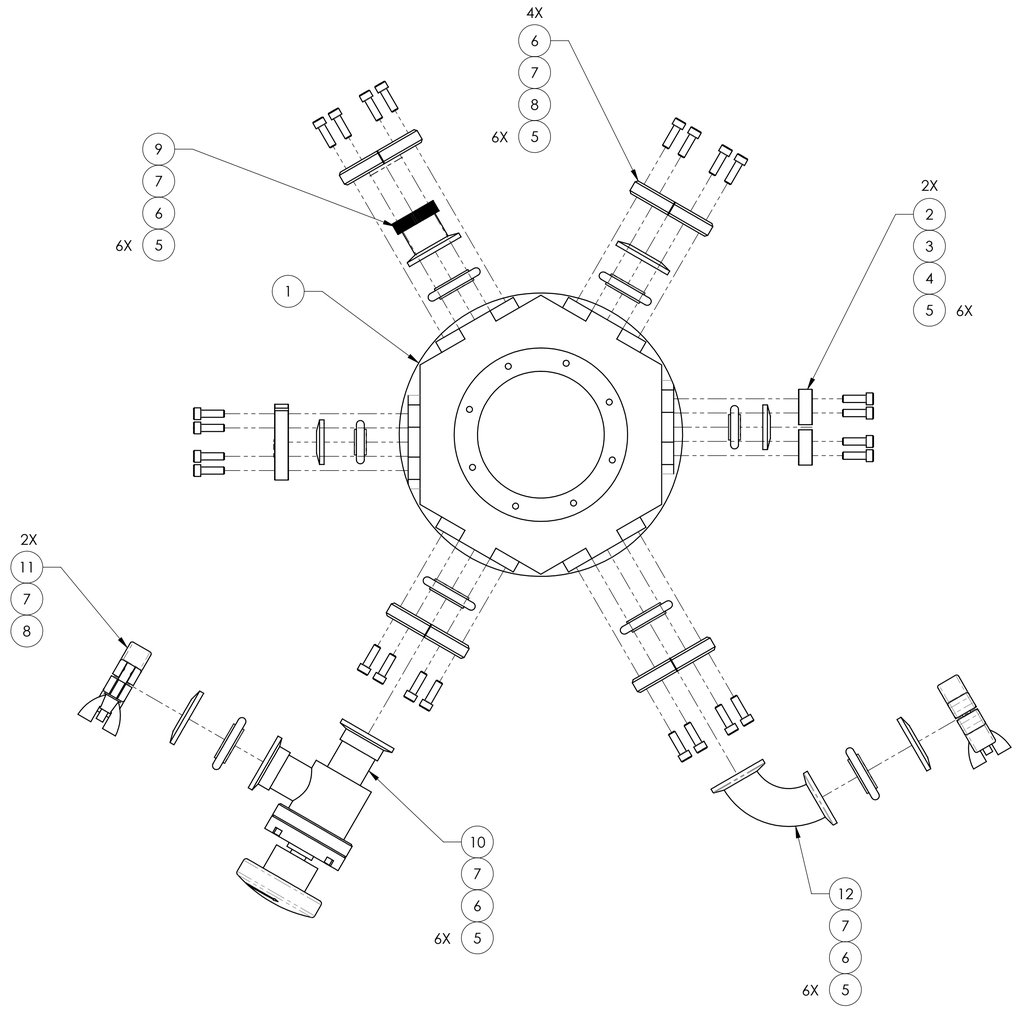

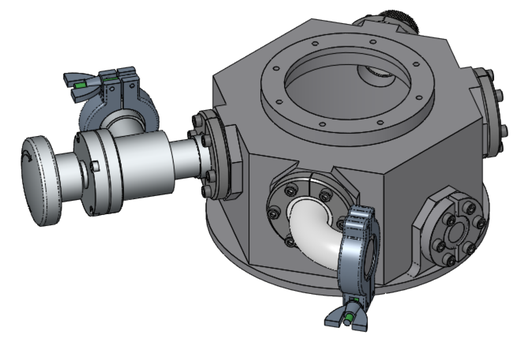

ISOMETRIC VIEW

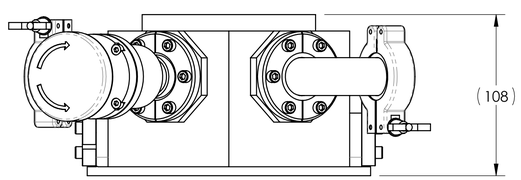

ITEM NO.	QTY	PART NUMBER	DESCRIPTION	MATERIAL	VENDOR
12	1	QF25-100-E90	KF ELBOW, 90 DEGREES, 316SS	AISI 316 Stainless Steel	KURT J LESKER
11	2	QF25-100-C	KF CAST CLAMP, ALUMINUM	6061-T6	KURT J LESKER
10	1	SA0100MVQF	MANUAL ANGLE VALVE, KF FLANGED SIZE 25	AISI 316 Stainless Steel	KURT J LESKER
9	1	SRV25	PRESSURE RELIEF VALVE		TBD
8	3	QF25-100-AB	BLANK KF FLANGE, ALUMINUM	6061-T6	KURT J LESKER
7	6	QF25-100-ARV	CENTERING RING WITH VITON O-RING	6061-T6	KURT J LESKER
6	4	QF25-100-BC	BULKHEAD CLAMP, SIZE 25	6061-T6	KURT J LESKER
5	36	92196A271	Socket Head Cap Screw, #10-32 X 5/8"	18-8 Stainless Steel	McMaster-Carr
4	2	QF16-075-AB	BLANK KF FLANGE, SIZE 16	6061-T6	KURT J LESKER
3	2	QF16-075-ARV	KF CENTERING RING, SIZE 16	6061-T6	MACHINED PART
2	2	QF16-075-BC	BULKHEAD CLAMP, SIZE 16	6061-T6	KURT J LESKER
1	1	GATPAL-ABA-B0A	CRYOSTAT PORTS BASE	6061-T6	MACHINED PART

NOTES: UNLESS OTHERWISE DETAILED

1. GEOMETRY AND OTHER DETAILS NOT PROVIDED HERE SHALL BE DERIVED FROM PROVIDED 3D CAD MODEL: GATPAL-ABA-B00-DETECTOR HOUSING PORTS ASSEMBLY, REV: A
2. 3D FILE REVISION TO BE EQUAL TO THIS 2D DRAWING.
3. TAG WITH PART NUMBER AND REVISION.

GATPAL-ABA-000	GATTINI
NEXT ASSY	USED ON
APPLICATION	

UNLESS OTHERWISE SPECIFIED:
DIMENSIONS ARE IN MM
TOLERANCES:
ANGULAR: MACH±0.50° BEND ±1.0°
LINEAR: 0-100: ±0.10 OVER 100: ±0.001/mm
INTERPRET GEOMETRIC TOLERANCING PER: ASME Y14.5M-1994 (R2002)
MATERIAL: SEE BOM
FINISH: "Finish"
DO NOT SCALE DRAWING

	DATE	NAME
DRAWN	"Drawn Date"	Alex Delacroix
CHECKED	xxx	Roger Smith
ENG APPR.	xxx	Roger Smith
MFG APPR.	xxx	Anna Moore
Q.A.		

3RD ANGLE PROJECTION

California Institute of Technology
Caltech Optical Observatories

TITLE:
CRYOSTAT PORTS ASSEMBLY
CRYOSTAT ASSEMBLY
GATTINI IR

SIZE	DWG. NO.	REV
D	GATPAL-ABA-B00	A
SCALE: 1:2	WT (KG.): 3.51	SHEET 1 OF 1

D GATPAL-ABA-B00 REV A