NGAO NGS WFS design review

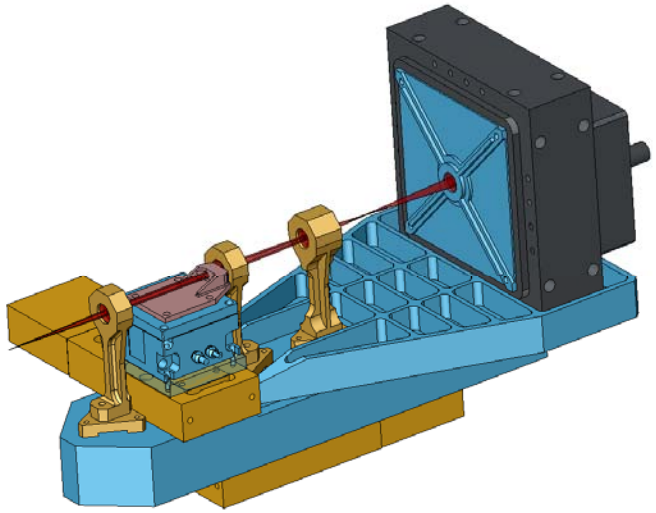

Caltech Optical Observatories

1st April2010

Presentation outline

- Requirements (including modes of operation and motion control)
- Introduction –
- NGSWFS input feed (performance of the triplet and effect of atmospheric dispersion)
- Modes of operation and pupil mapping demystified
- NGS WFS design (sensor design in all three modes, post-lenslet relay design and performance
- Summary
- Outstanding issues
- Brief outline of CCID74 performance specs.

NGS WFS Requirements

- Modes of operation (FR-130 and FR-3247)
  - 63 x 63 sub-apertures
  - 5 x 5 sub-apertures
  - Pupil imaging mode
- Transmission & Operating wavelengths (FR-203and FR-3444)
  - 500 to 900 nm with transmission of (500nm: 78%, 550nm: 80%, 633nm: 77%, 700nm: 74%, 880nm: 78%).
- Patrol Field of Regard (FR-127)
  - 40 x 60 arcsec rectangle (limited by narrow field relay)
  - NGS WFS Field Steering Mirror Ass'ly based pick-off design
- WFS FoV
  - 4 arcseconds in 60 x 60 mode (FR-131)
- NGS WFS operates with no ADC (B2C decision)

Motion control requirements

- Field steering mirrors – need to be able to pick any star in a 60x40 arcsecond Field of Regard
- Whole WFS motion – the WFS must work with and without the IF dichoric
- Lenslet XY motion & post-lenslet relay and camera focus – the WFS needs to operate in 63x63, 5x5 and pupil imaging modes.

NGAO optical relay – the packaging problem

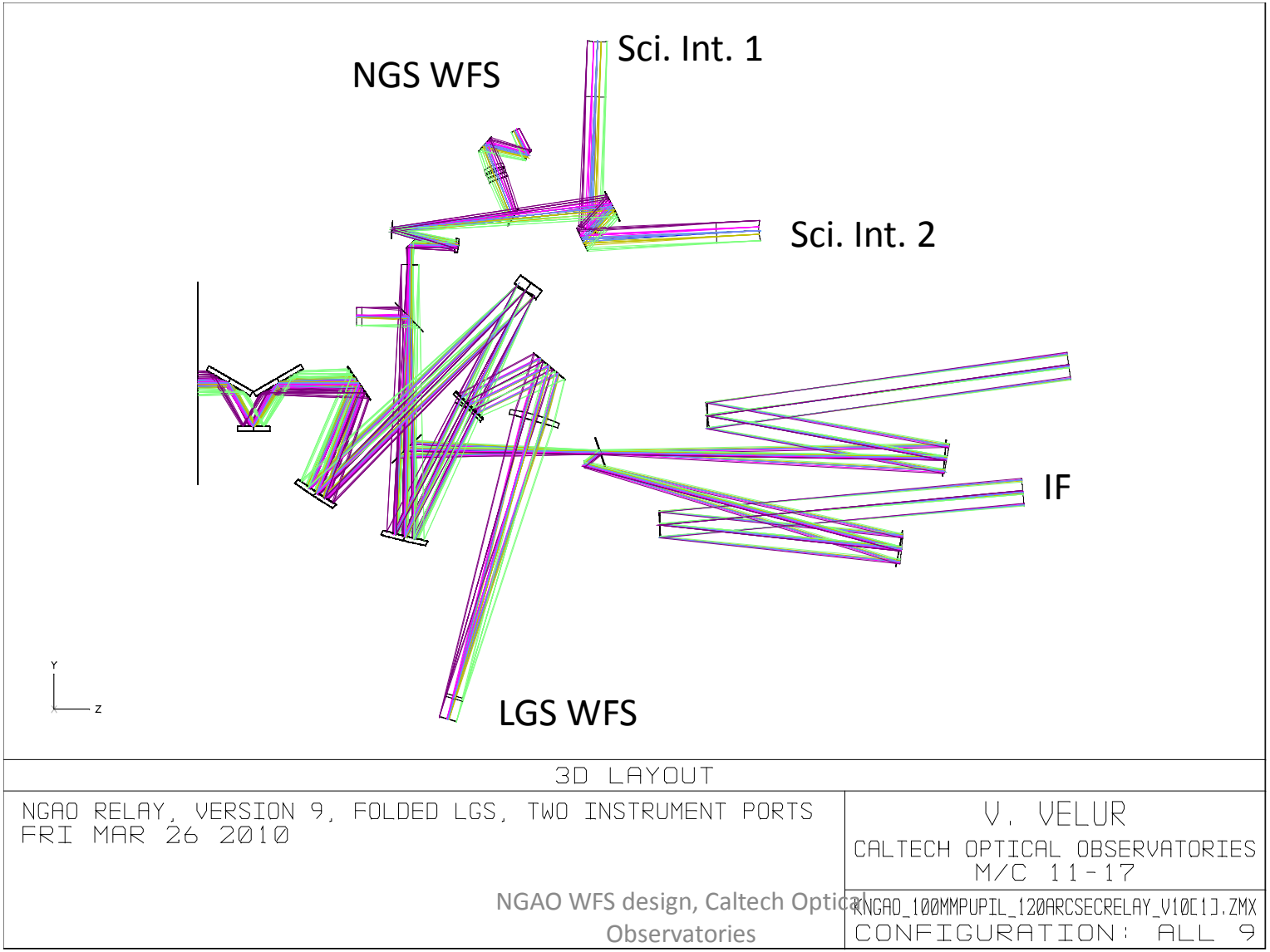

Context diagram of the NGS WFS

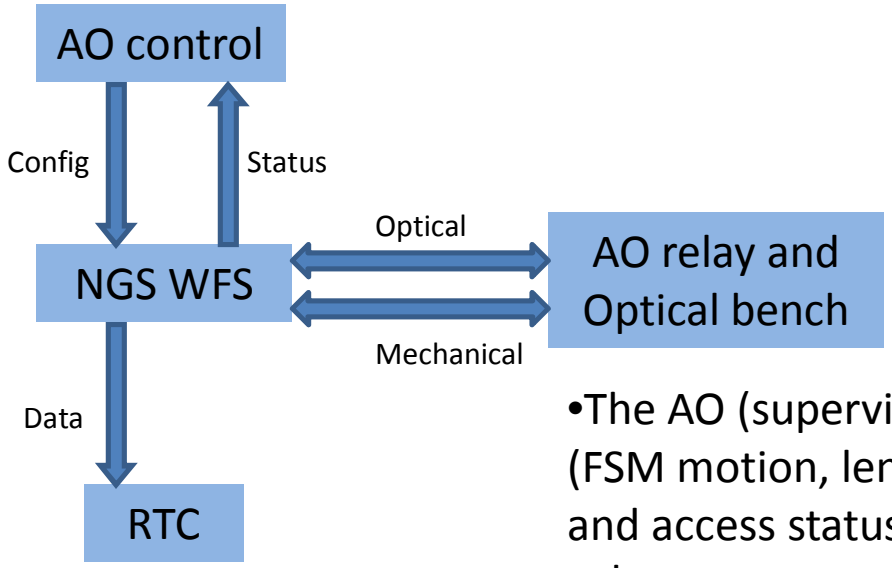

- The AO (supervisory) control can configure (FSM motion, lenslets, read-out mode etc.) and access status signals from the NGSWFS sub-system.
- NGS WFS needs to interface mechanically and optically to the AO relay/ optical bench.
- NGSWFS needs to send pixel data to the RTC.
- Note that the RTC has no control path to the sensor (unlike the LGSWFS where there is a TT mirror control).

Input to the NGS sensor

Design characteristics:

- NGS light is picked off in collimated space and focused using a (BASF2-N15-BASF2) triplet
- F/# = 20.012
- Plate scale = 1.063 mm/”

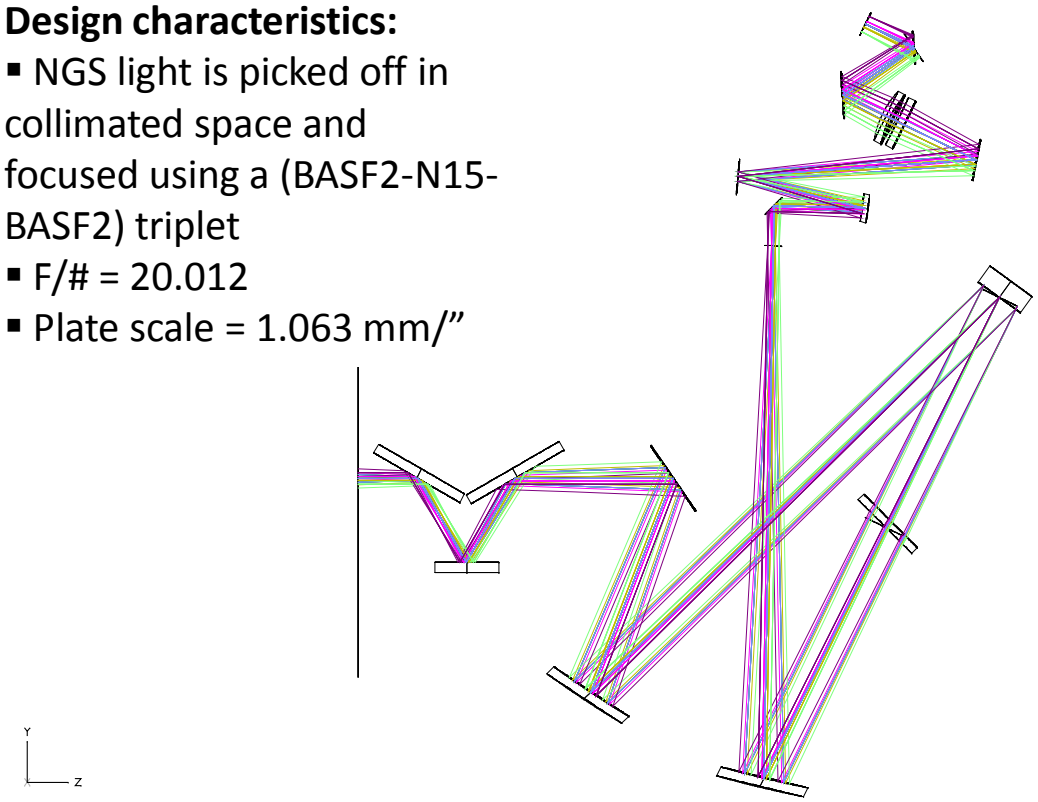

3D LAYOUT

TUE MAR 23 2010

V. VELUR
CALTECH OPTICAL OBSERVATORIES
M/C 11-17

KNGAO_100MMPUPIL_120ARCSECRELAY_V9_LGSFOLDED_REV18.ZMX
CONFIGURATION: ALL 1

Input to the NGS sensor – spot diagram at the NGS sensor pick-off focal plane

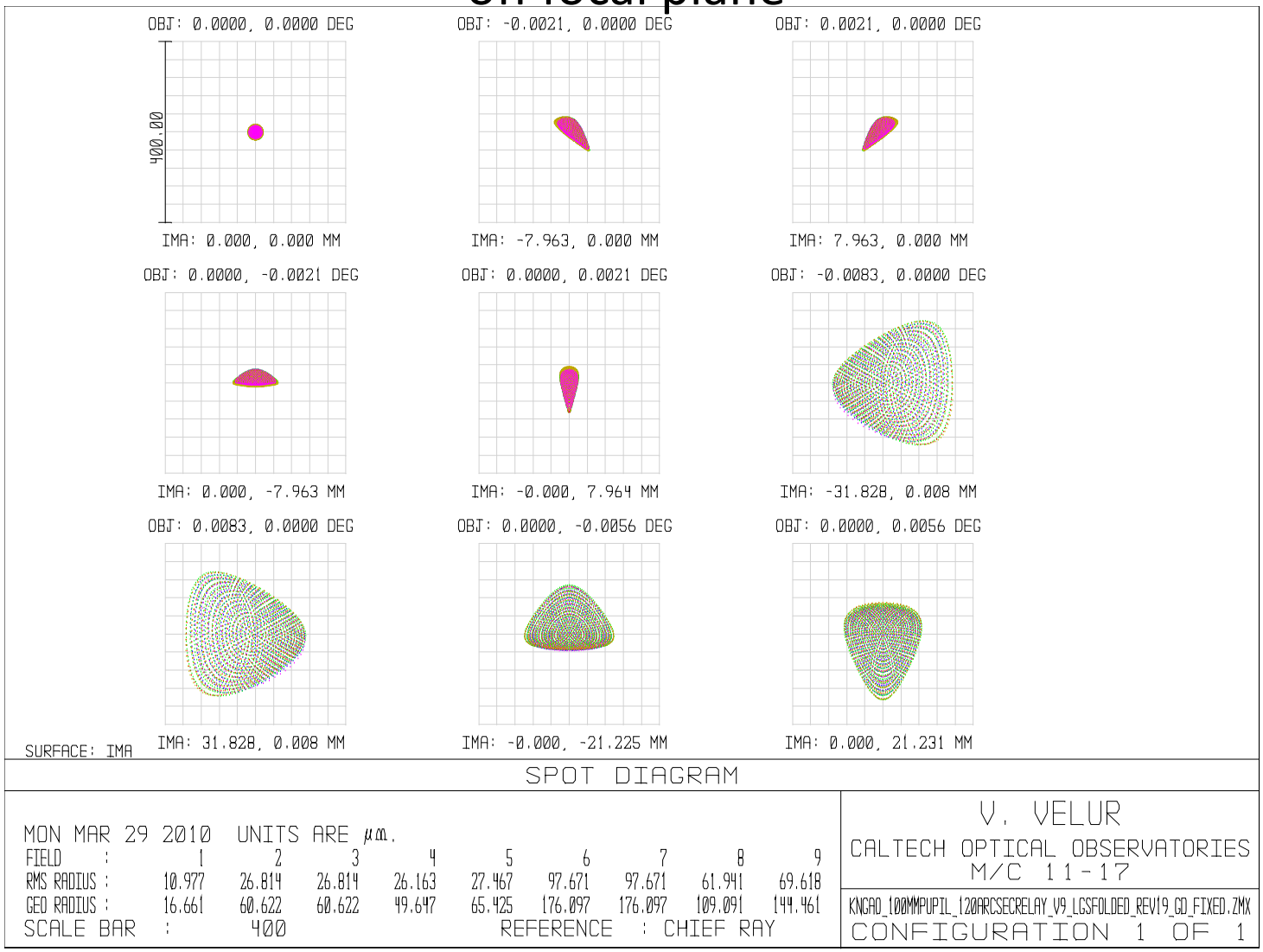

SPOT DIAGRAM

MON MAR 29 2010 UNITS ARE μm.

FIELD :	1	2	3	4	5	6	7	8	9
RMS RADIUS :	10.977	26.814	26.814	26.163	27.467	97.671	97.671	61.941	69.618
GEO RADIUS :	16.661	60.622	60.622	49.647	65.425	176.097	176.097	109.091	144.461

SCALE BAR : 400 REFERENCE : CHIEF RAY

V. VELUR
CALTECH OPTICAL OBSERVATORIES
M/C 11-17

KNGAO_100MMPUPIL_120ARCSECRELAY_V9_LGSFOLDED_REV19_GD_FIXED.ZMX
CONFIGURATION 1 OF 1

Ray fans at the NGS sensor pick-off focal plane

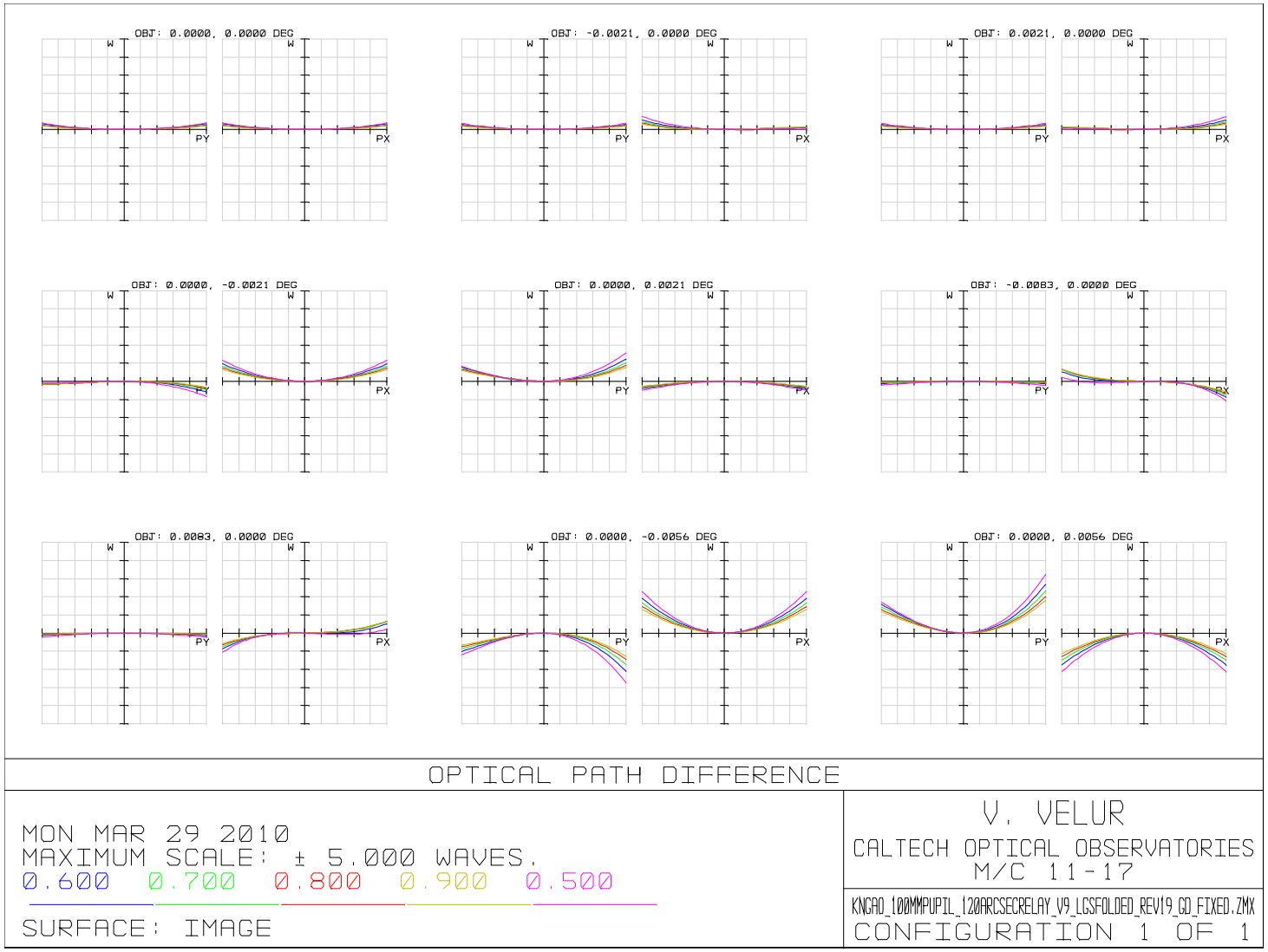

Grid distortion at the NGS WFS input

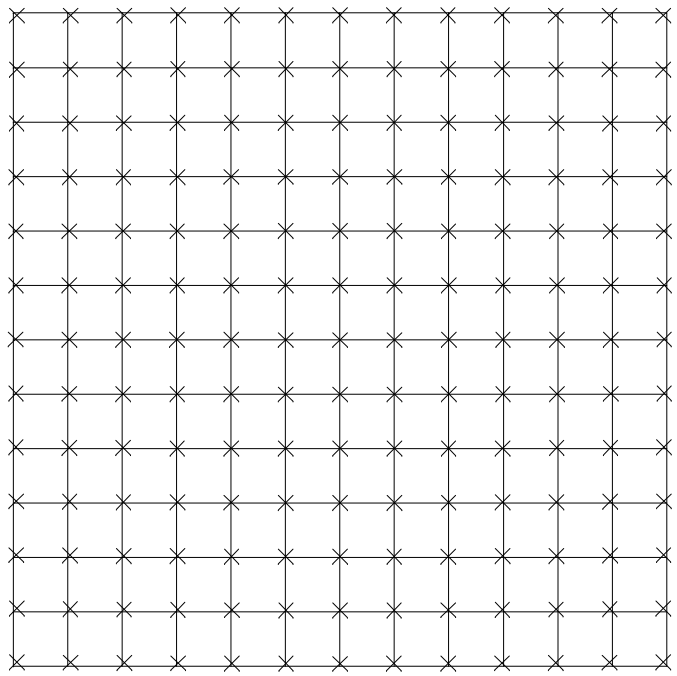

GRID DISTORTION

TUE MAR 23 2010
FIELD: 0.0118 W 0.0118 H DEGREES
IMAGE: 45.03 W 45.03 H MILLIMETERS
MAXIMUM DISTORTION: -0.1217%
SCALE: 10.000X, WAVELENGTH: 0.6000 μm

V. VELUR
CALTECH OPTICAL OBSERVATORIES
M/C 11-17

KNGAO_100MMPUPIL_120ARCSECRELAY_V9_LGSFOLDED_REV19_GD_FIXED.ZMX
CONFIGURATION 1 OF 1

Effect of atmospheric dispersion

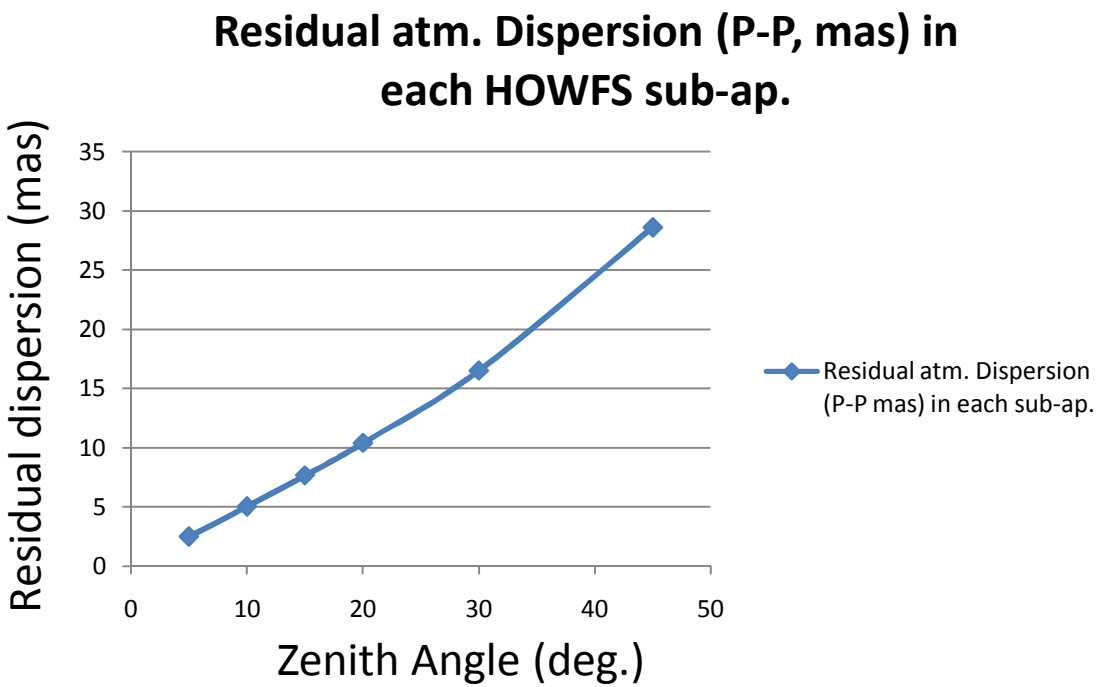

Max. dispersion introduced by the atmosphere between 500-900 nm = 29 mas at 45 degree zenith angle – ***results in negligible change in sub-aperture spot size***

What's the implication for the NGS WFS?

- Wavefront error on input beam is 1.15 waves RMS (6 waves P-V) @ 600 nm at the extreme (and worst case) field points. This is mostly astigmatism.
- As per KAON 685 we know that this corresponds to (y = ar^2 -> 0.69 *10^(-6) = 25 * a -> a = .276*10^(-7); dy/dr = 2*a*r ->dy/dr=0.2*10^(-6)) *[c.f. Figure 13 in the KAON]*
- KAON 692 Figures 9 and 10 along with corresponding analysis also indicate that for a large # of sub-apertures (60 in our case) the sub-ap spot size due to input aberration is going to be of the order of 2 um (RMS).

Analysis result

- Impact of input aberrations
  - Negligible impact on NGS WFS subaperture spot size
  - Acceptable centroid offsets (~0.1 pixel worst case)
  - Small amount of distortion (0.13%) will be calibrated using ACQ system
  - Chromatic aberrations acceptable (TBC?)
- Atmospheric dispersion introduces ~30 mas of spot blurring.

NGS WFS parameters

- Following Keck Drawing Drawing #1410-CM0010 Rev. 1, we have 59 (+1/2+1/2) WFS sub-apertures across the a circle that inscribes the Keck primary mirror. We also support another calibration mode with 5x5 pupil samples across the Keck primary mirror.
- The WFS FoV is 4" because the sensor needs to track extended objects that are 4" in diameter. One could also work out the spot size.

Seeing					
Natural seeing FWHM at GS wavelength				0.46	arcsec
Subaperture Tip/Tilt corrected FWHM				0.36	arcsec
AO-compensated FWHM				0.06	arcsec
Contribution due to seeing				0.36	arcsec
System Aberrations					
Aberrations in AO thru to WFS				0.25	arcsec
Atmospheric Dispersion					
ADC in HOWFS?			NO		
RMS blurring due to atmospheric dispersi				0.000	arcsec
Total size of detected return beam:				0.44	arcsec
Charge Diffusion					
Charge Diffusion				0.25	pixels
Contribution due to Charge Diffusion				0.40	arcsec
Subaperture Diffraction					
Lambda/d (for sensing)				0.71	arcsec
Spot size used for centroiding				**0.93**	**arcsec**

Modes of operation

- 63x63 sub-ap. mode of operation
  - We use 4 physical pixels per sub-ap. Which can be binned on chip and read as 2x2 pixels/sub-aperture with almost zero read noise penalty. This gives us the flexibility of 2 modes, one with high linearity and another with lower read noise.
  - Only 59x59 sub-apertures are lit by NGS star light at any time. The pupil imaged by the WFS nutates around the 63x63 sub-apertures.
- 5x5 mode of operation
  - to simply the size of moving parts while facilitating the two pupil sampling modes, we use the same collimator and post-lenslet relay for both the 63 and 5 sub-ap mode of operation.
  - We choose 48 pixels/sub-aperture (instead of 50 pixels/sub-ap) to enable 4x4 binned pixel/sub-aperture operation with standard centroiding algorithms.
  - A small fraction of light will be lost from the outer-most sub-apertures due to pupil nutation.
- Pupil imaging mode – The NGS WFS can image the pupil using the WFS camera.

Keck primary projected on the 64x64 actuator BMM HODM

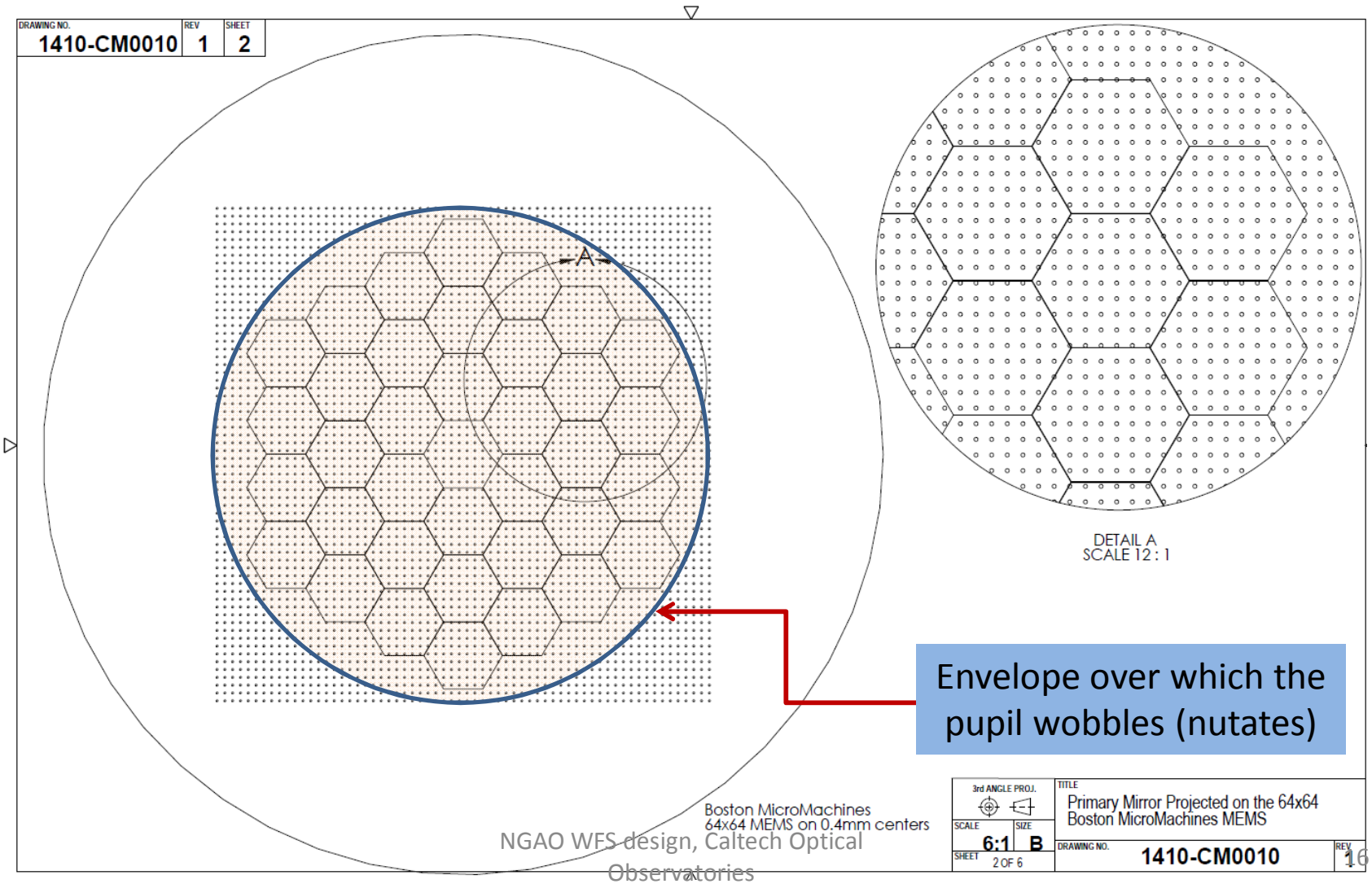

Motion control

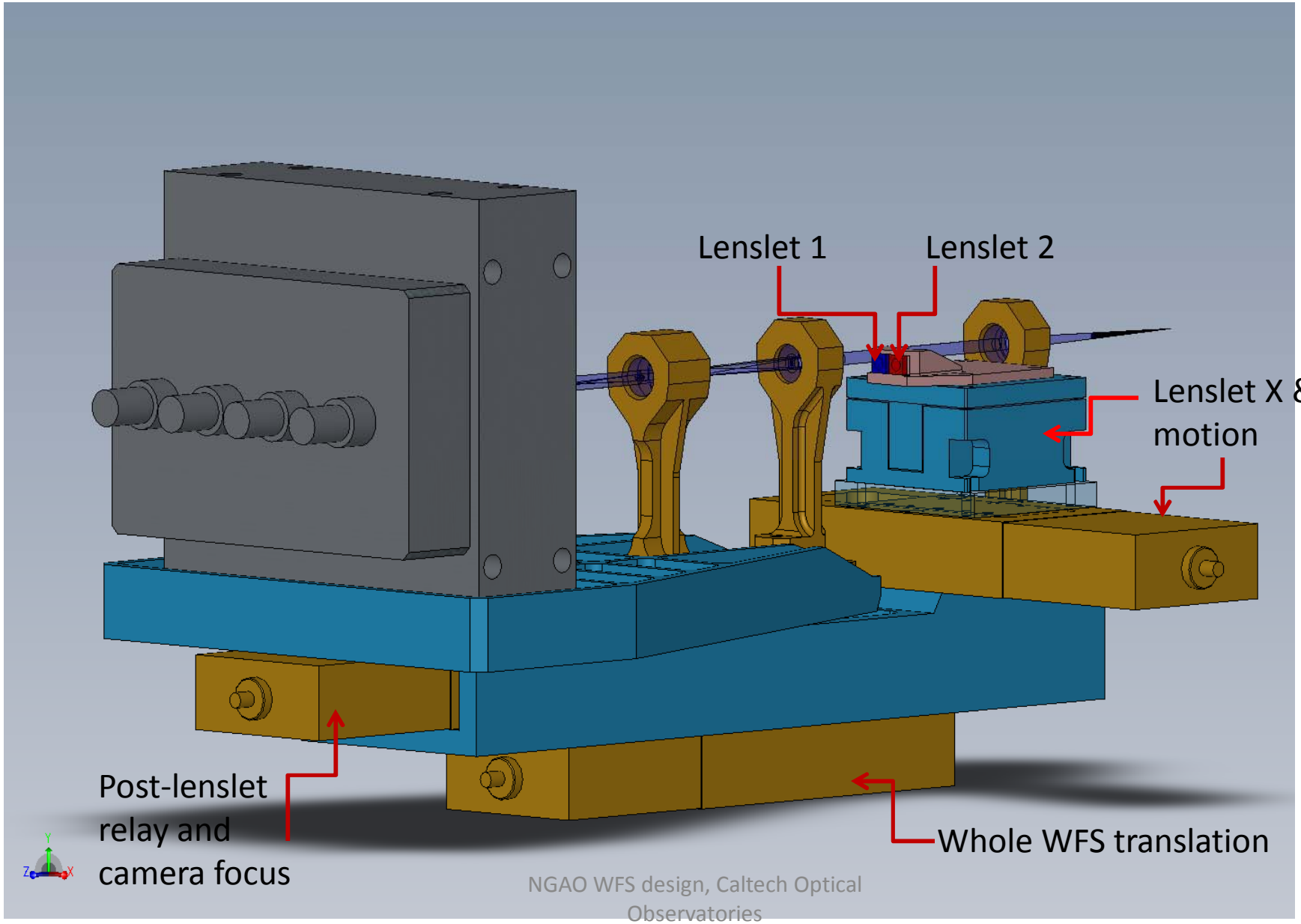

Modes of operation cont'd

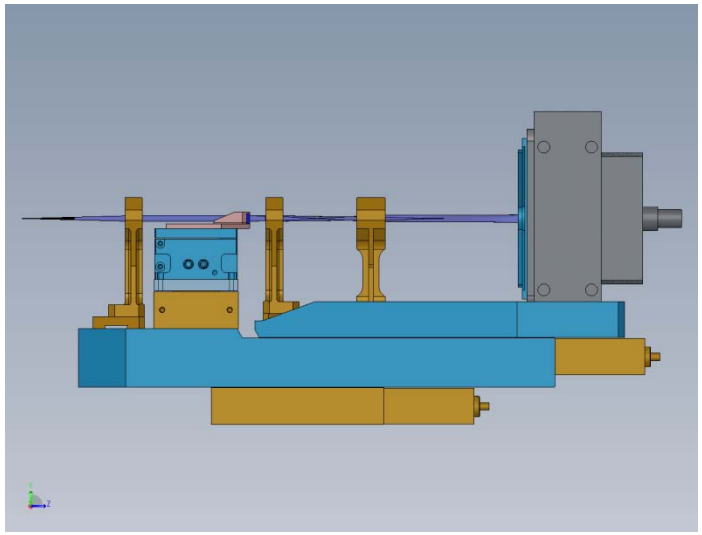

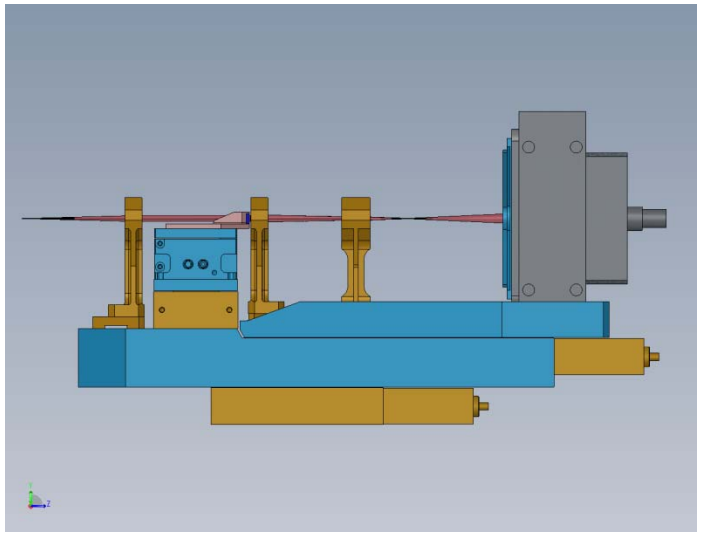

Modes(Clockwise from top): 5x5, 63x63 and pupil imaging modes

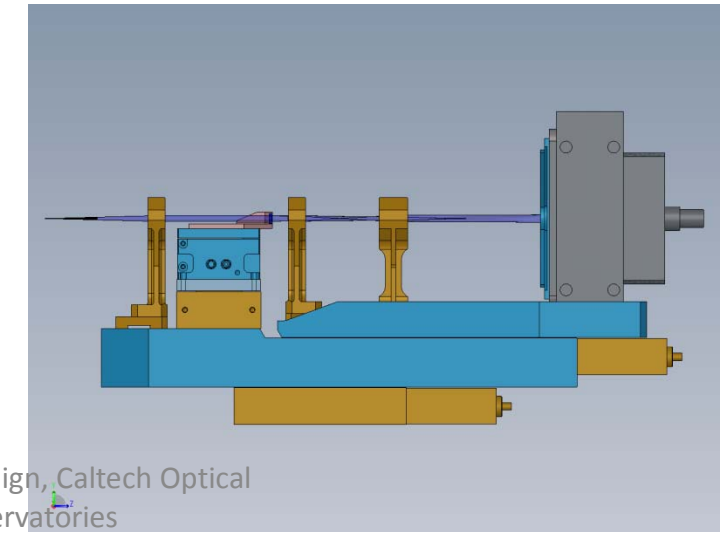

Modes of operation cont'd

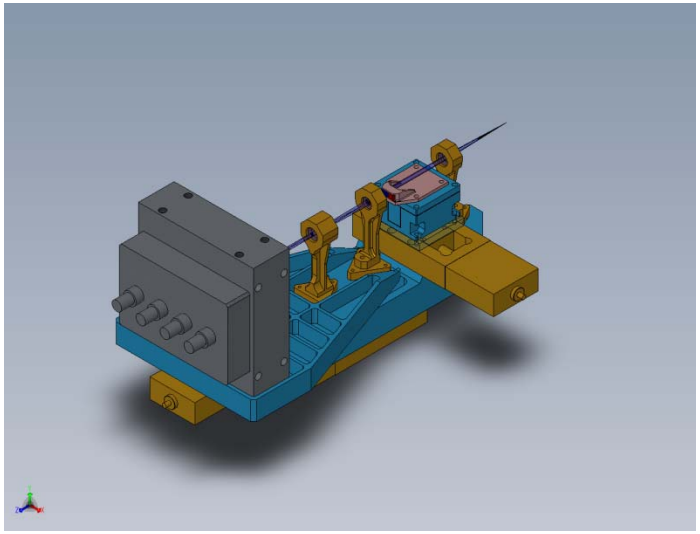

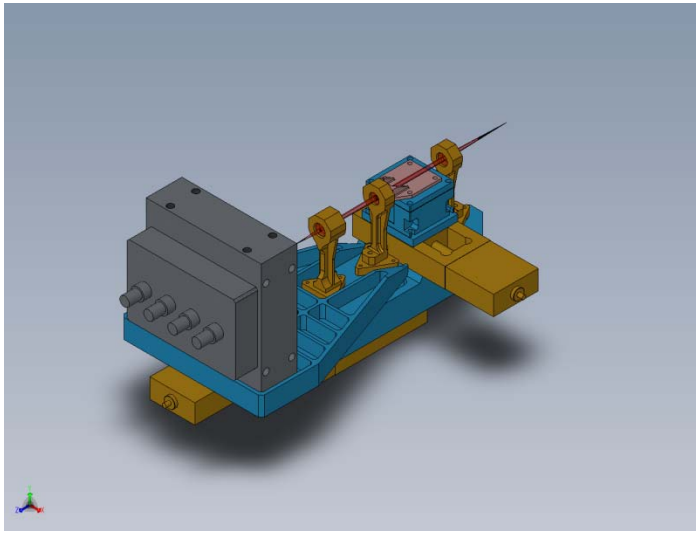

Modes(Clockwise from top): 5x5, 63x63 and pupil imaging modes

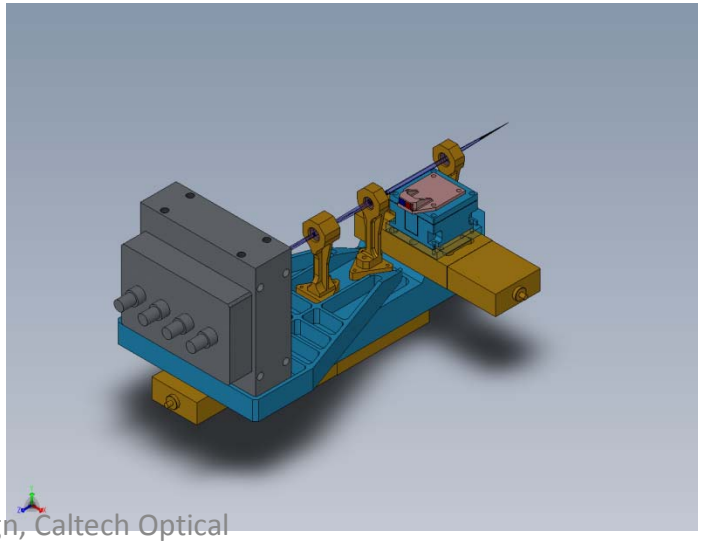

Pupil mapping between NGSWFS-DM and primary mirror

As per Drawing #1410-CM0010 Rev. 1, :

- The whole DM would be mapped by using a pupil that is 25.2 mm/24 mm * 10.949 = 11.49645 m and has the same focal length (149.583 m). This corresponds to an F/# = 13.01123.
- Plate scale = 13.01123*11.49645/(180/pi*3600) = 725.1979 um/” at the telescope focal plane
- The apparent plate scale at the NGS pick off focal plane is 19.06163 (instead of 20.012). The plate scale is 1.0623 mm/”.

WFS design parameters

Parameter	60x60 mode	5x5 mode	units
f_collimator	60	60	mm
Input plate scale	1.0623	1.0623	mm/"
Binned pixel size (# of pixels)	1	12	pixels
Detector plate scale (mm/")	0.0210	0.2520	mm/"
Plate scale ratio (IPS/DPS)	50.58	4.22	
input f/#	19.06	19.06	
pupil sampling	63	5	sub-aps across pupil
d_lenslet	0.05	0.60	mm
de-magnification (m)	1.68	1.68	
f_lenslet	0.71	8.47	mm
f# lenslet	14.12	14.12	
wavelength (for worst case FN calc.)	0.90	0.90	um
fresnel #	0.98	11.80	
radius of curvature of lenslet	0.36	4.38	mm

63x63 NGS WFS layout

- Total relay length = 262 mm
- Components from (left to right) –collimating doublet, lenslet array, field singlet, focusing doublet followed by the window and the detector.
- Wavelength of operation – 500-900 nm *(TBC)*

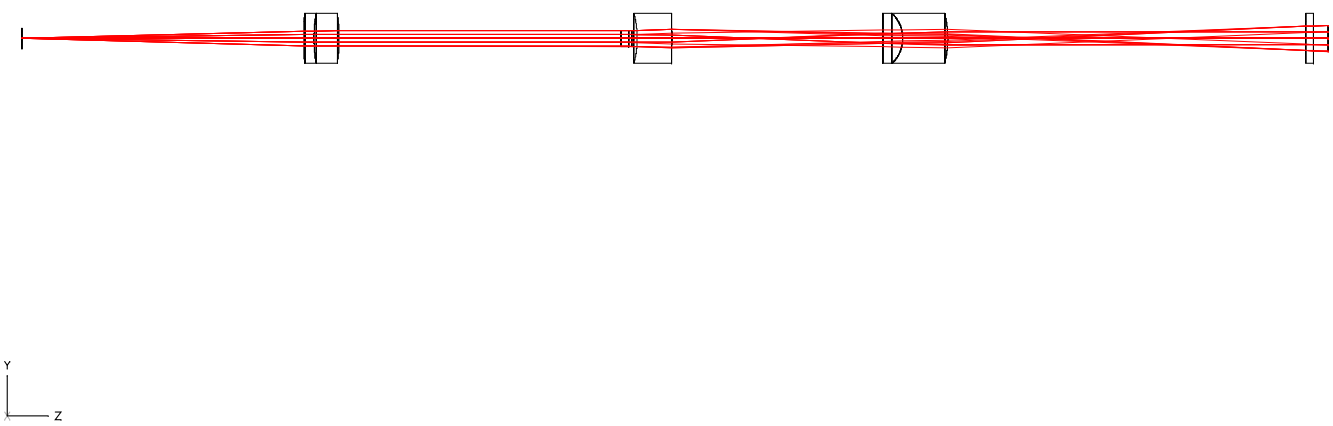

3D LAYOUT

MON MAR 29 2010

V. VELUR
CALTECH OPTICAL OBSERVATORIES
M/C 11-17

NGS_WFS_63_W_RELAY_REV4_FIXED.ZMX
CONFIGURATION: ALL 1

63x63 sub-aperture NGS WFS spots

21 um pixel detector with 63 spots with 4x4 pixels/sub-aperture.

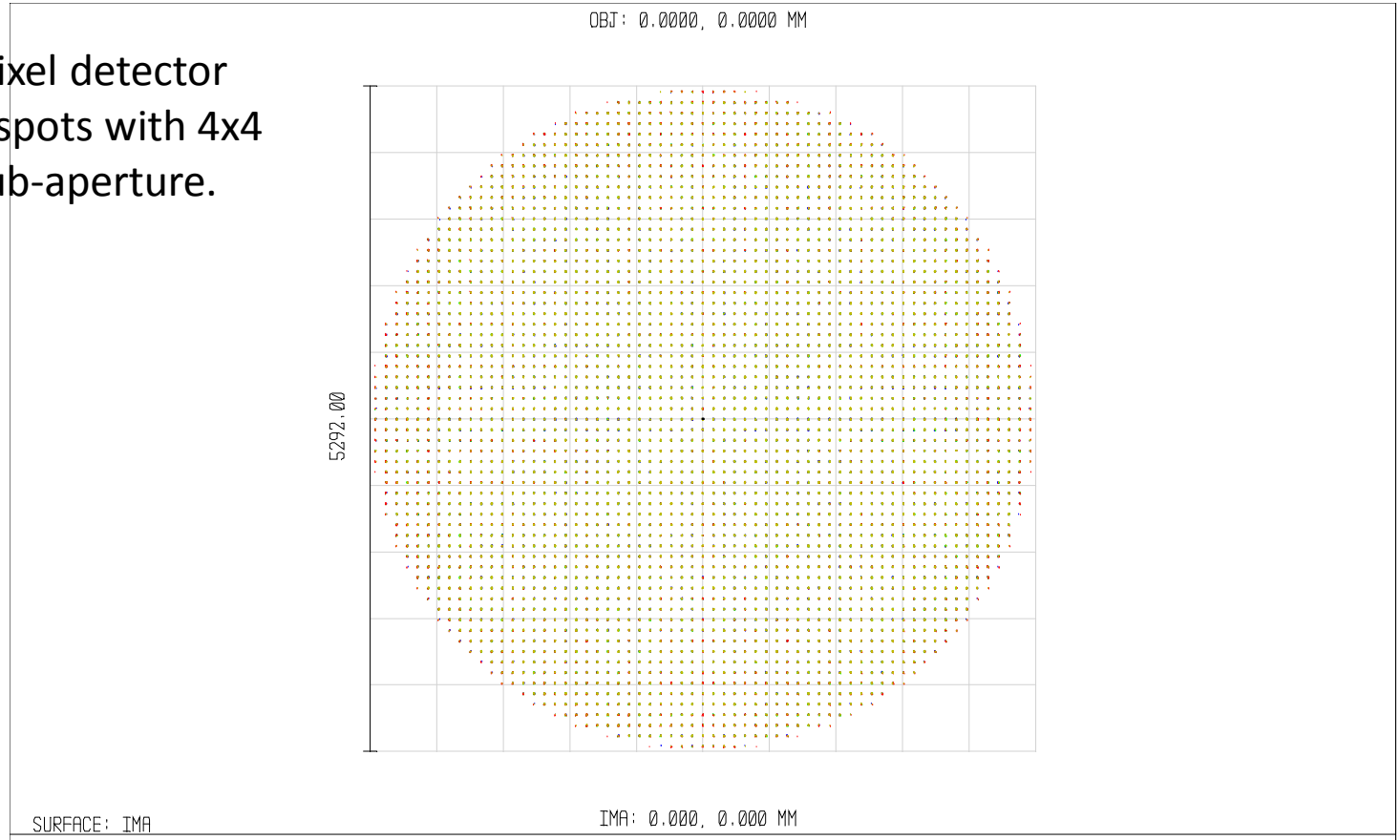

63x63 NGS WFS layout

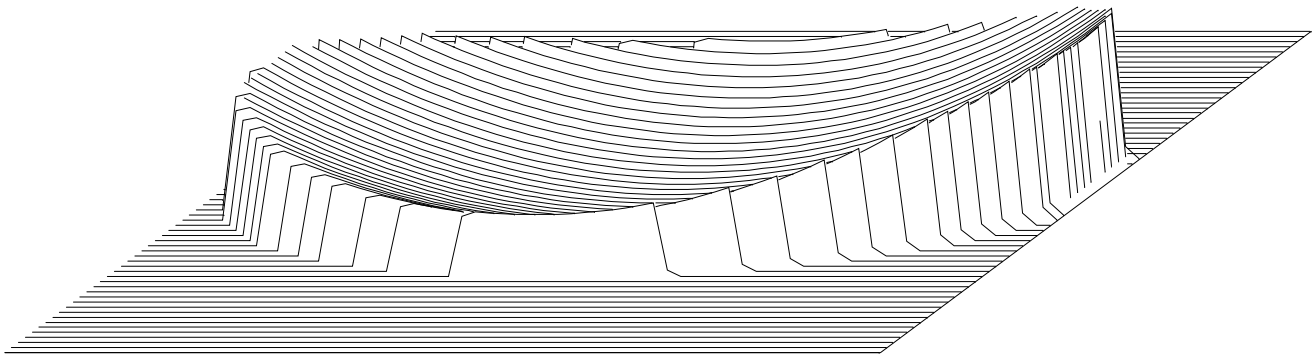

WAVEFRONT FUNCTION

FRI MAR 26 2010
0.5000 µm AT 2.1246, 0.0000 MM
PEAK TO VALLEY = 0.1387 WAVES, RMS = 0.0299 WAVES.
SURFACE: 4 (CUSTOM LENSLET)
EXIT PUPIL DIAMETER: 3.1471E+000 MILLIMETERS

V. VELUR
CALTECH OPTICAL OBSERVATORIES
M/C 11-17

NGS_WFS_63_W_RELAY_REV5.ZMX
CONFIGURATION 1 OF 1

63x63 NGS WFS layout

Lens Data Editor

Edit Solves View Help

Surf	Type	Comment	Radius		Thickness		Glass	Semi-Diameter		Conic	Par 0(unused)	Par 1(unused)	Par 2(unused)	Par 3(unused)	Par 4(unused)	Par
OBJ	Standard		Infinity		56.502			2.125		0.000						
1*	Standard		83.790		2.000		N-SF5	5.000	U	0.000						
2*	Standard		28.120		5.000		N-BK7	5.000	U	0.000						
3*	Standard	45267	-35.920		56.500			5.000	U	0.000						
4	Standard	custom lenslet	Infinity		1.500		N-BK7	1.607		0.000						
STO	Lens Array		-0.365		0.706			1.581		0.000		63.000	63.000	0.051	0.051	
6	Standard		Infinity		1.000			1.606		0.000						
7*	Standard	custom singlet	-19.621	V	7.000		F2	5.000	U	0.000						
8	Standard		-14.189	V	42.189	V		2.065		0.000						
9*	Standard	custom doublet	257.699	V	4.000		BAFN10	5.000	U	0.000						
10*	Standard		-6.849	V	9.000		SF10	5.000	U	0.000						
11*	Standard		-20.361	V	71.668	V		5.000	U	0.000						
12*	Standard		Infinity		1.500		BK7	5.000	U	0.000						
13	Standard		Infinity		3.000			2.503		0.000						
14	Standard		Infinity		0.000			2.652		0.000						
IMA	Standard		Infinity		-			2.652		0.000						

63x63 NGS WFS post lenslet relay

- Mag. = 1.681
- Total relay length = 139 mm

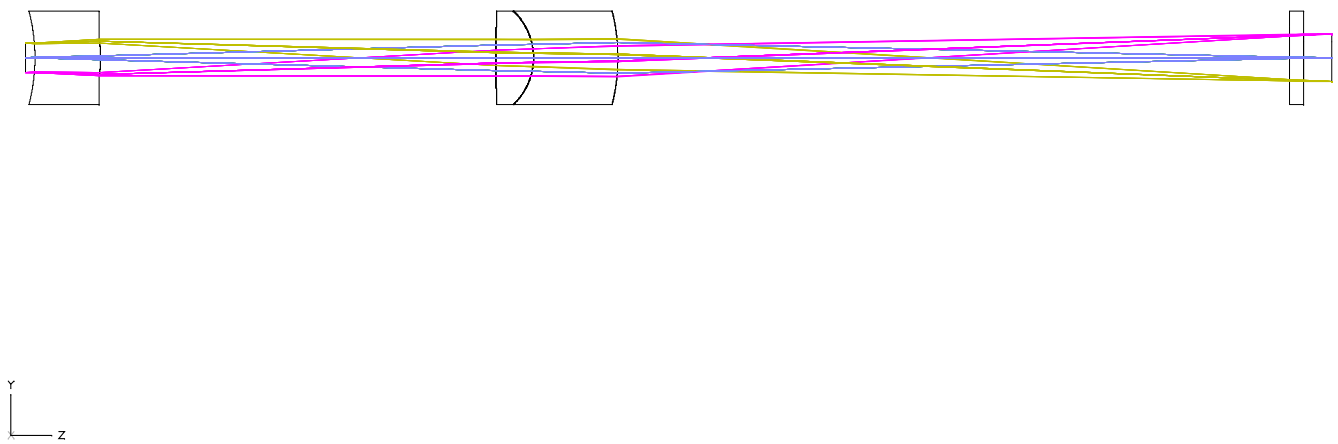

3D LAYOUT

MON MAR 29 2010

V. VELUR
CALTECH OPTICAL OBSERVATORIES
M/C 11-17

NGS_63_RELAY_REV8.ZMX
CONFIGURATION: ALL 1

Post lenslet relay – spots delivered by the relay

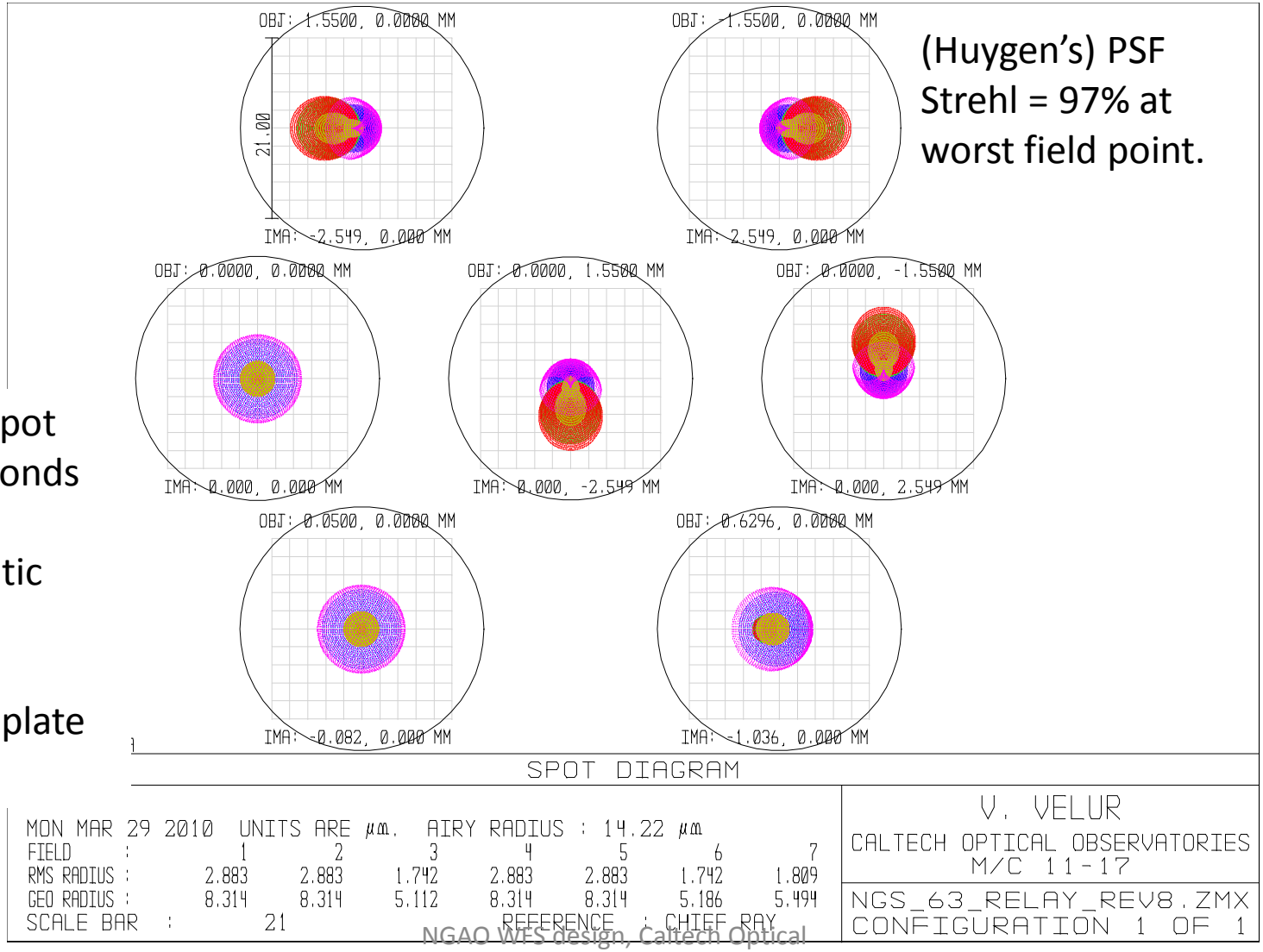

(Huygen's) PSF Strehl = 97% at worst field point.

3 um RMS spot size corresponds to 0.33asec (FWHM) static error in the sensor @ 1asec/pixel plate scale

Post lenslet relay – grid distortion

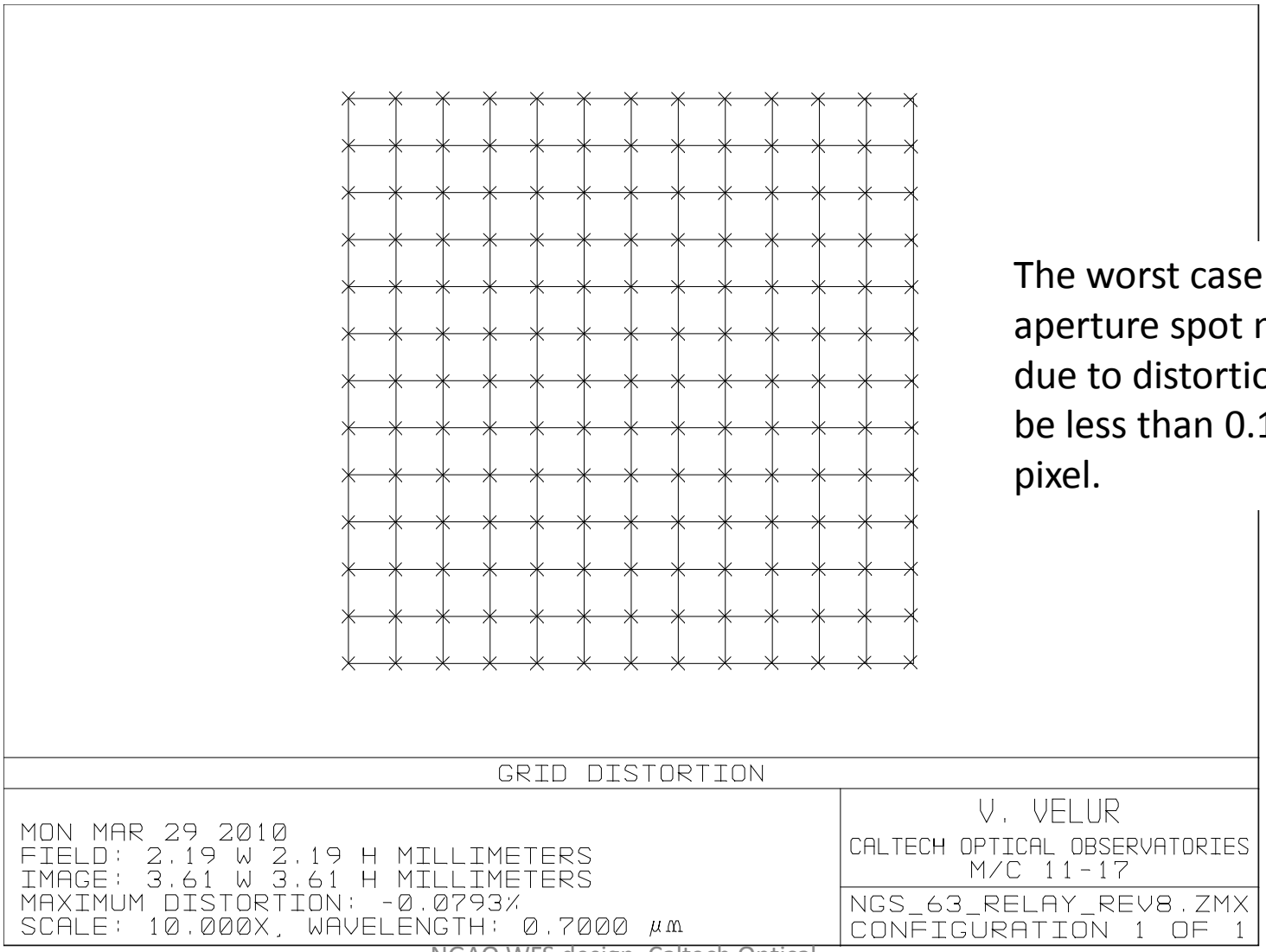

The worst case sub-aperture spot motion due to distortion will be less than 0.1 of a pixel.

5x5 NGS (calibration) WFS layout

- Total relay length = 269 mm
- Components from (left to right) –collimating doublet, lenslet array, field singlet, focusing doublet followed by the window and the detector.
- Wavelength of operation – 500-900 nm

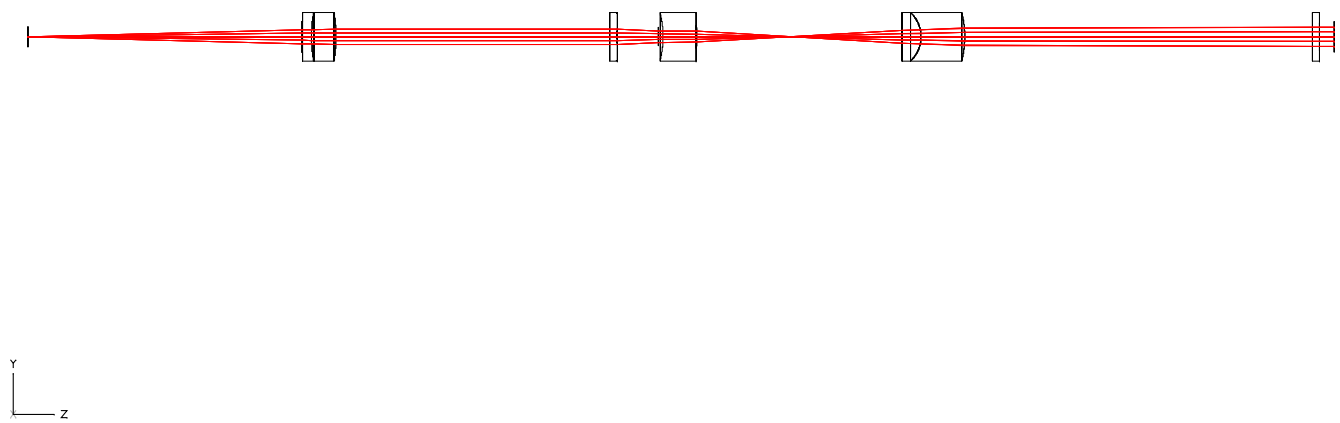

3D LAYOUT

MON MAR 29 2010

V. VELUR
CALTECH OPTICAL OBSERVATORIES
M/C 11-17

NGS_WFS5_W_RELAY_REV5.ZMX
CONFIGURATION: ALL 1

5x5 NGS WFS layout

RD11 RD10

5040 um detector with 5 spots across the pupil with 4x4 (binned) pixels/sub-aperture *[48x48 physical pixels/sub-aperture]*

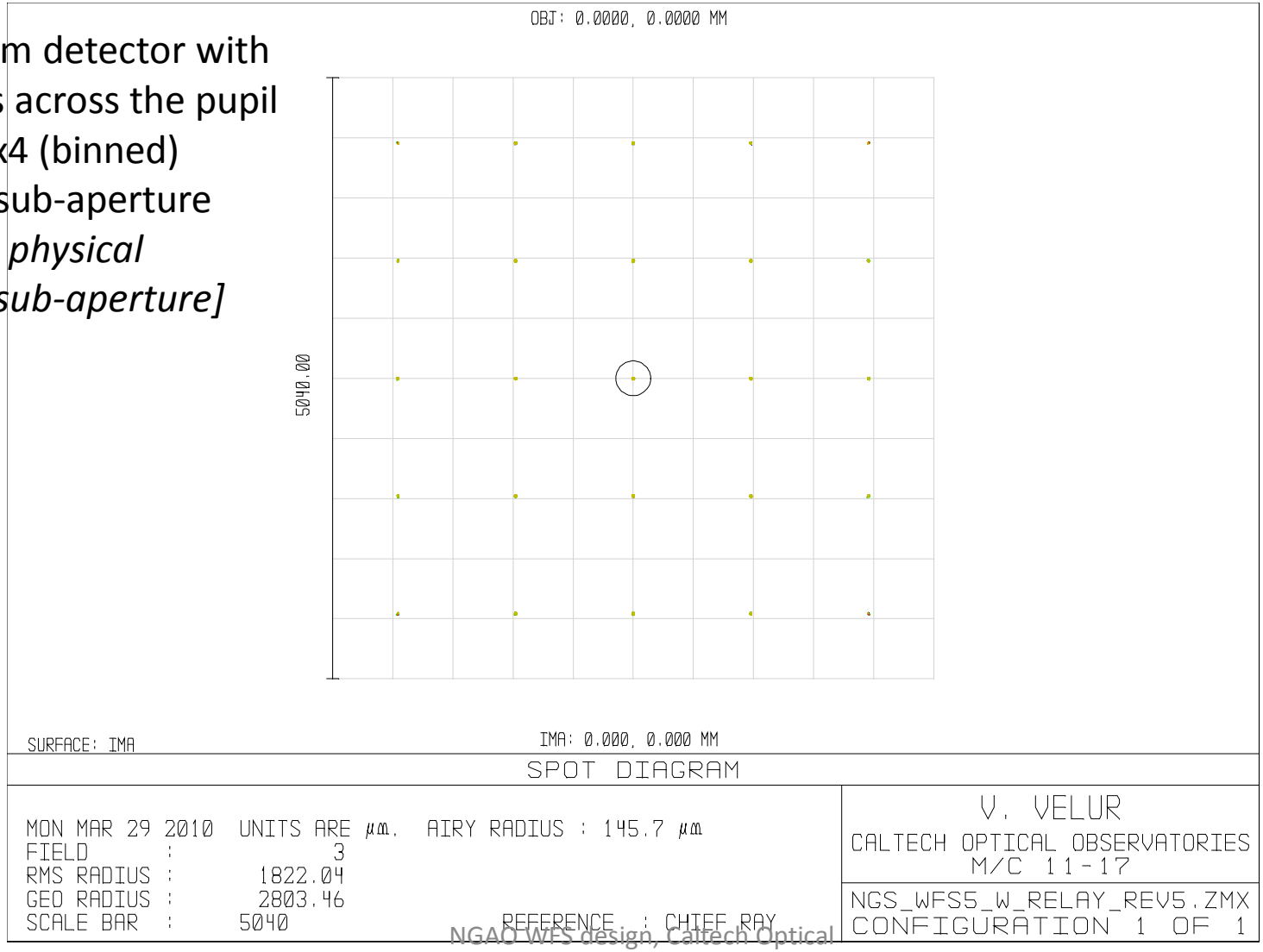

Slide 30

RD10 This seems to show subimages separated by 2 x 2 pixels (ZMX artefact). Would be better with actual detector pixels (or binned pixels)
Richard Dekany, 3/24/2010

RD11 So? ???
Richard Dekany, 3/24/2010

5x5 NGS WFS layout

Lens Data Editor

Edit Solves View Help

Surf	Type	Comment	Radius		Thickness		Glass		Semi-Diameter		Conic	Par 0(unused)	Par 1(unused)	Par 2(unused)	Par 3(unused)	Par 4(unused)	Par 5(u
OBJ	Standard		Infinity		56.502				2.125		0.000						
1*	Standard		83.790		2.000		N-SF5		5.000	U	0.000						
2*	Standard		28.120		5.000		N-BK7		5.000	U	0.000						
3*	Standard	45267	-35.920		56.500				5.000	U	0.000						
4*	Standard	custom lenslet	Infinity		1.500		N-BK7		5.000	U	0.000						
STO	Lens Array		-4.375		8.467				1.581		0.000		5.000	5.000	0.599	0.599	
6	Standard		Infinity		1.000				1.917		0.000						
7*	Standard	custom singlet	-19.621	V	7.000		F2		5.000	U	0.000						
8	Standard		-14.189	V	42.189	V			2.394		0.000						
9*	Standard	custom doublet	257.699	V	4.000		BAFN10		5.000	U	0.000						
10*	Standard		-6.849	V	9.000		SF10		5.000	U	0.000						
11*	Standard		-20.361	V	71.668	V			5.000	U	0.000						
12*	Standard		Infinity		1.500		BK7		5.000	U	0.000						
13	Standard		Infinity		3.000				2.940		0.000						
IMA	Standard		Infinity		-				3.159		0.000						

Reminder: The 5x5 and the 63x63 modes use the same post-lenslet relay

NGS WFS behind the NGAO optical relay

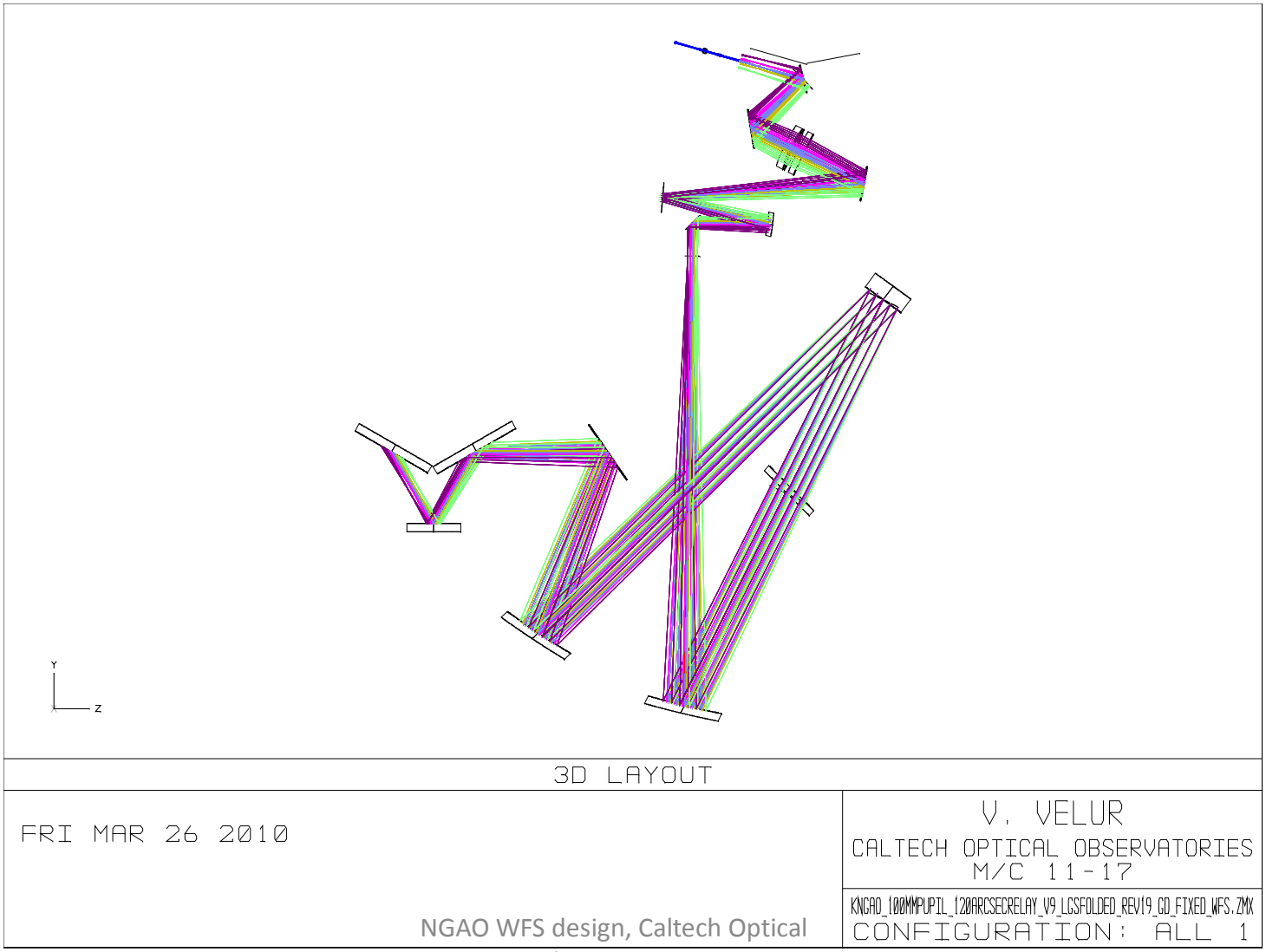

NGS WFS spots showing 59 'lit' sub-apertures

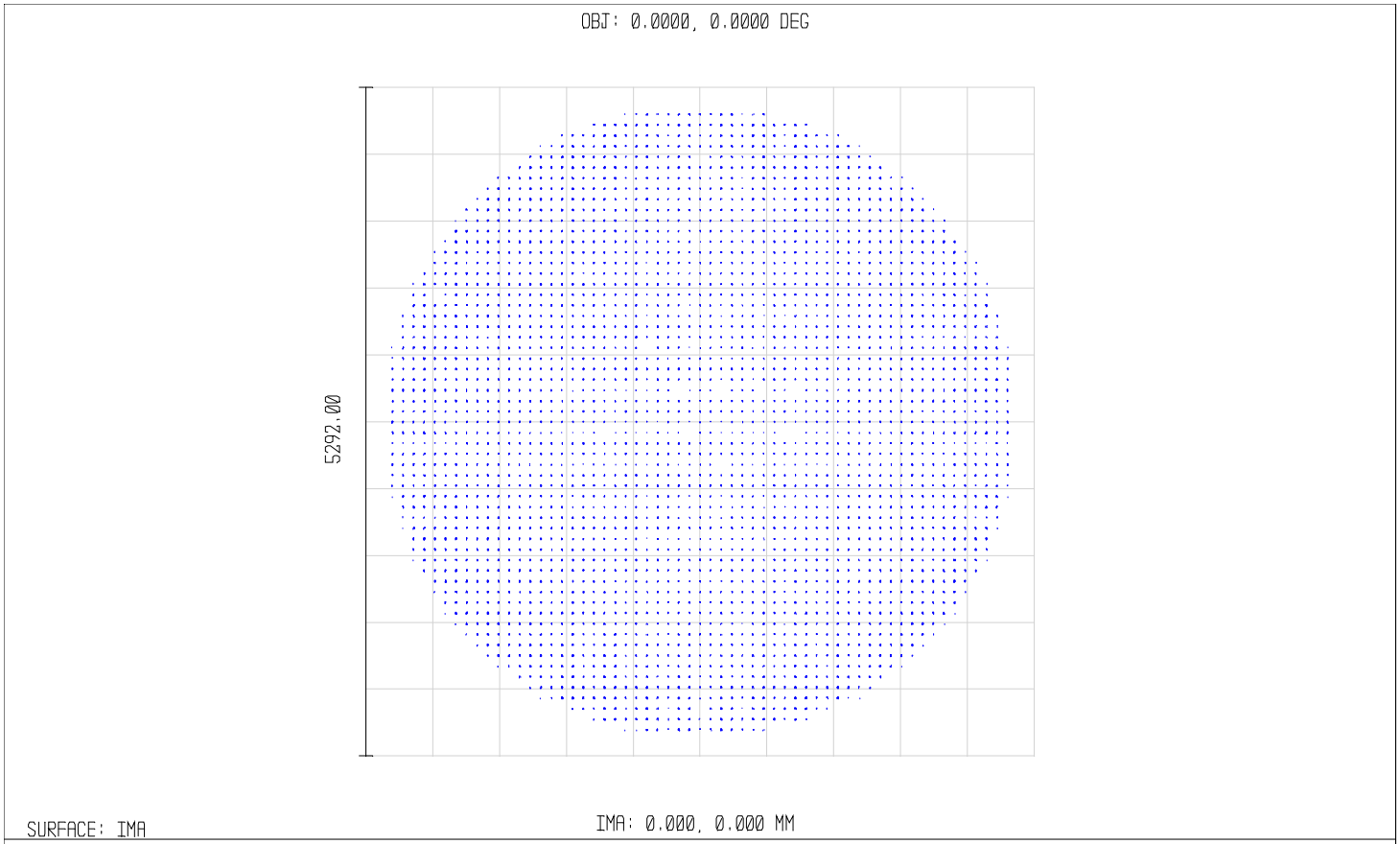

Post lenslet relay – magnified view

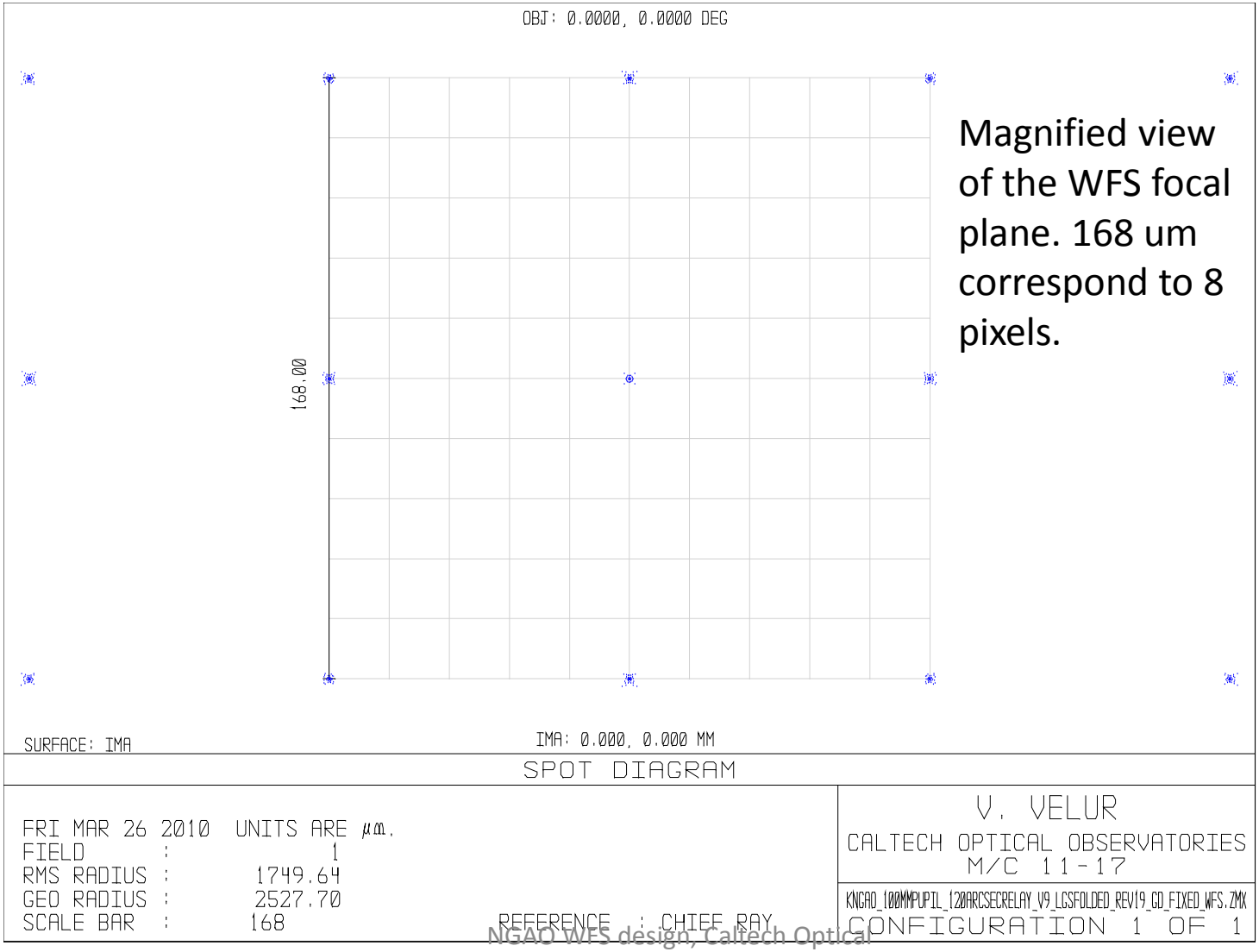

Magnified view of the WFS focal plane. 168 um correspond to 8 pixels.

Summary of work done by WFS team

- Contributed to systems engineering and requirements ratification process
- Designed a NGS feed using a refractive triplet to solve NGAO's packaging problem while delivering a f/20 beam to the NGS sensor.
- Designed a compact WFS that works in 63x63, 5x5 and pupil imaging modes.
- Made a list of outstanding issues and analysis for the DD phase.
- Built a compliance matrix and risk register.

Other issues

- For B2C we ruled out an ADC in the NGS WFS
  - What is the implication of this?
- What about pupil imaging mode?
- What are the mechanical stage, etc. requirements?
- Alignment issues
  - Anything unusual? Fixtures, etc. Is this really the same as any other NGS WFS ever built?
  - Manufacturing / alignment tolerances
- Thermal issues
  - -15C operation (does this matter?) RD14
- Stray light
  - Baffles / filters (unnecessary?)
  - Ghosts (usually not an issue of NGS WFS, but for PDR mention for completeness)

Slide 36

RD14 Not be top priority for mini-review

Richard Dekany, 3/24/2010

Detector choice and performance

- NGAO envisages the use of 256x256 pixel CCID74 detector with 21 um pixels that is under development at Lincoln Labs for wavefront sensing.

Predicted Quantum efficiency*

(based on 75 micron substrate, Bodacious Black AR coating^ on Pan-STARRS CCID-58)

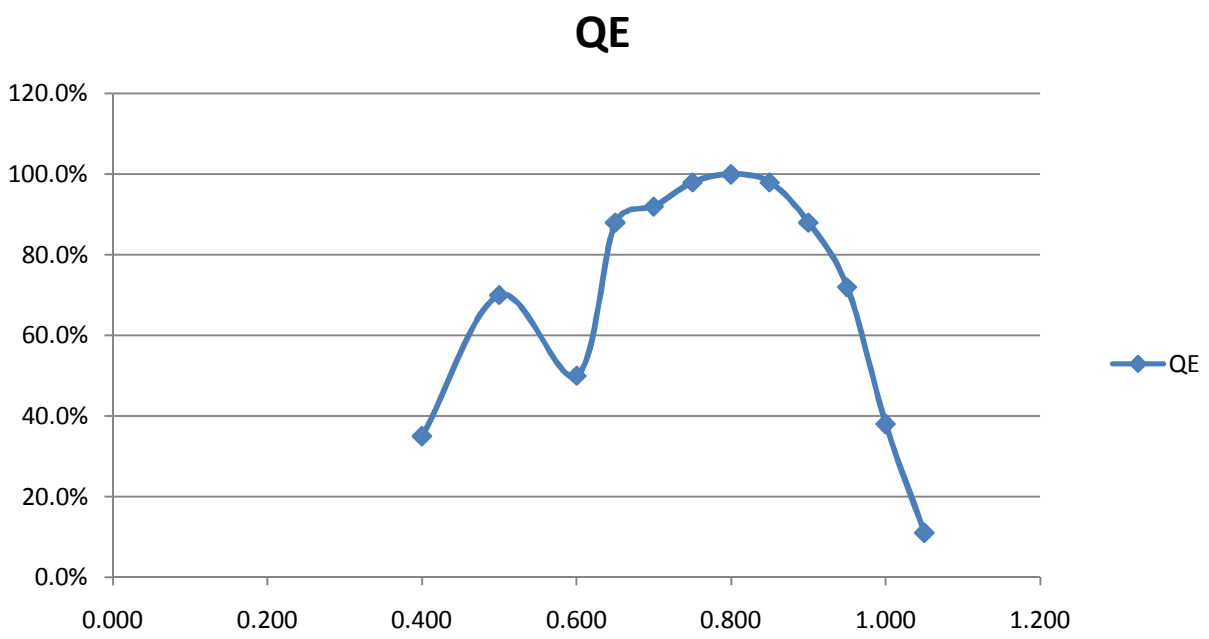

^ - LL plans to use a different AR coating that will result in ~90% QE at 589 nm

*-Source - S. Adkins, Pvt. Comm.

Read noise *[predicted and measured]*