NGAO LGS

Design Study Update

Alex Delacroix

11/03/2009

Version 3

1.1) LGS Schematic diagram and motion control

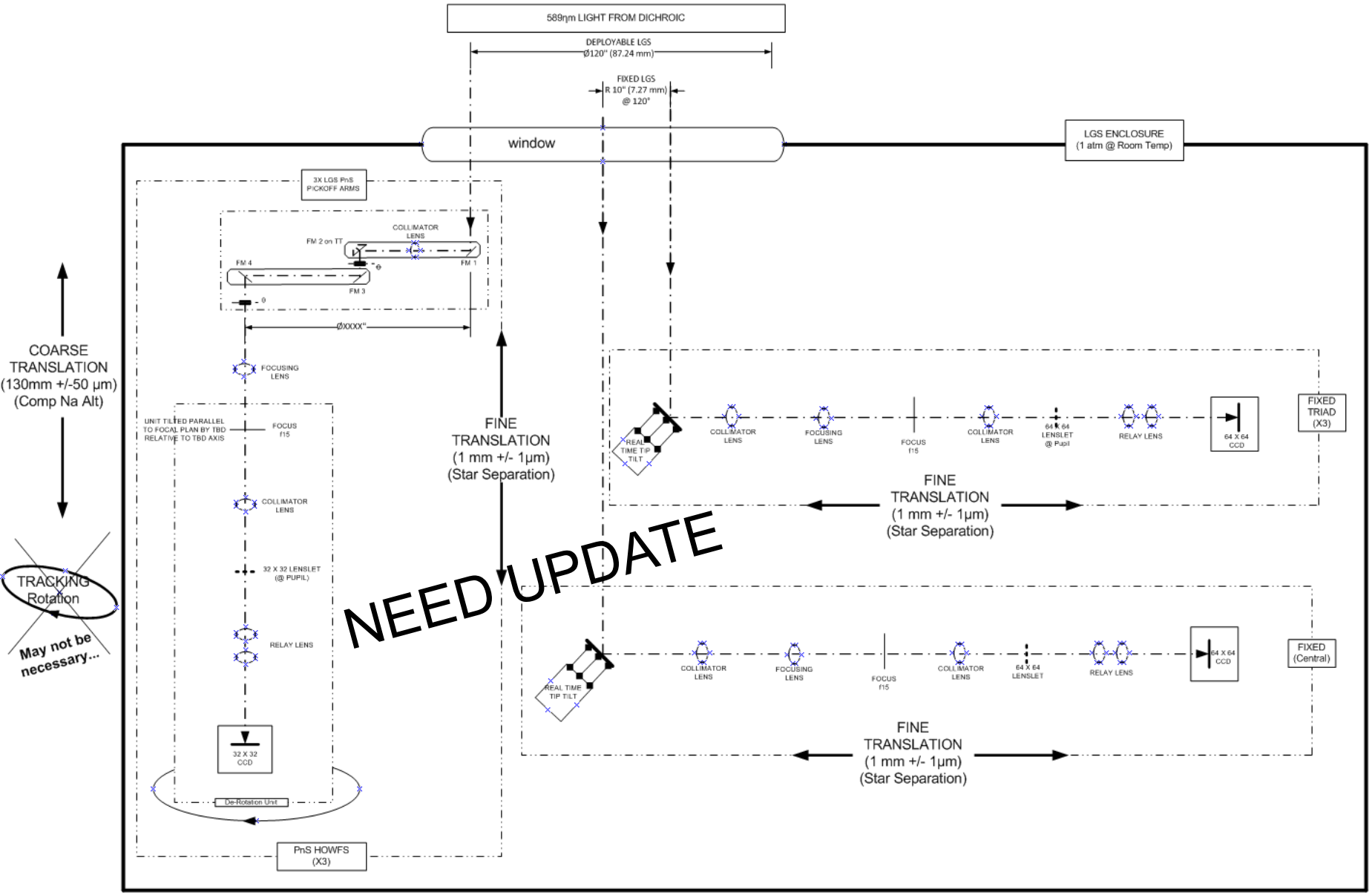

1.2) LGS within NGAO

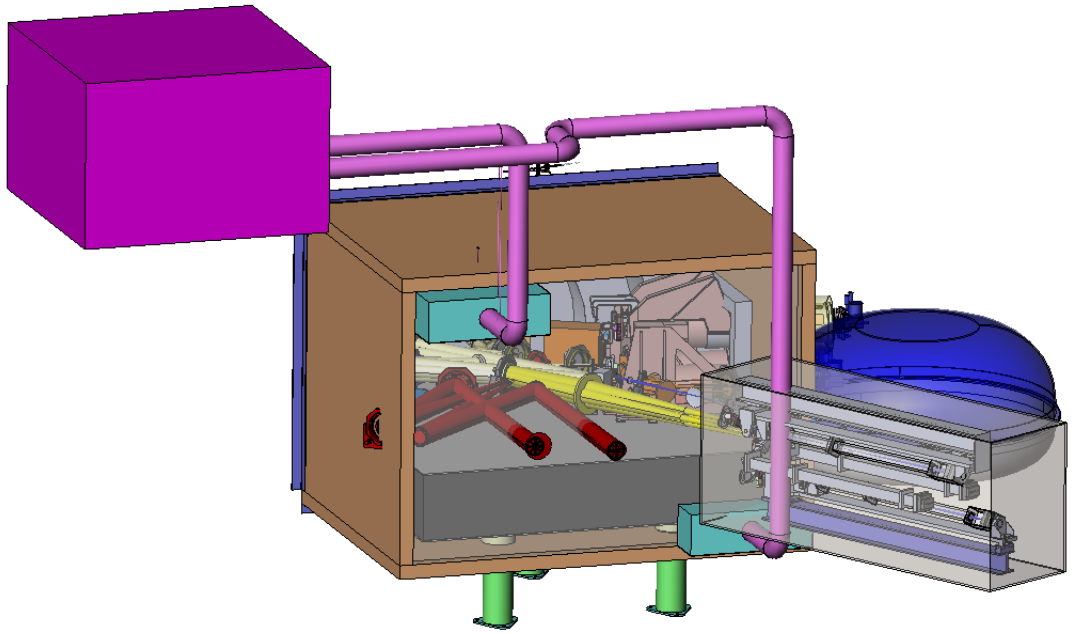

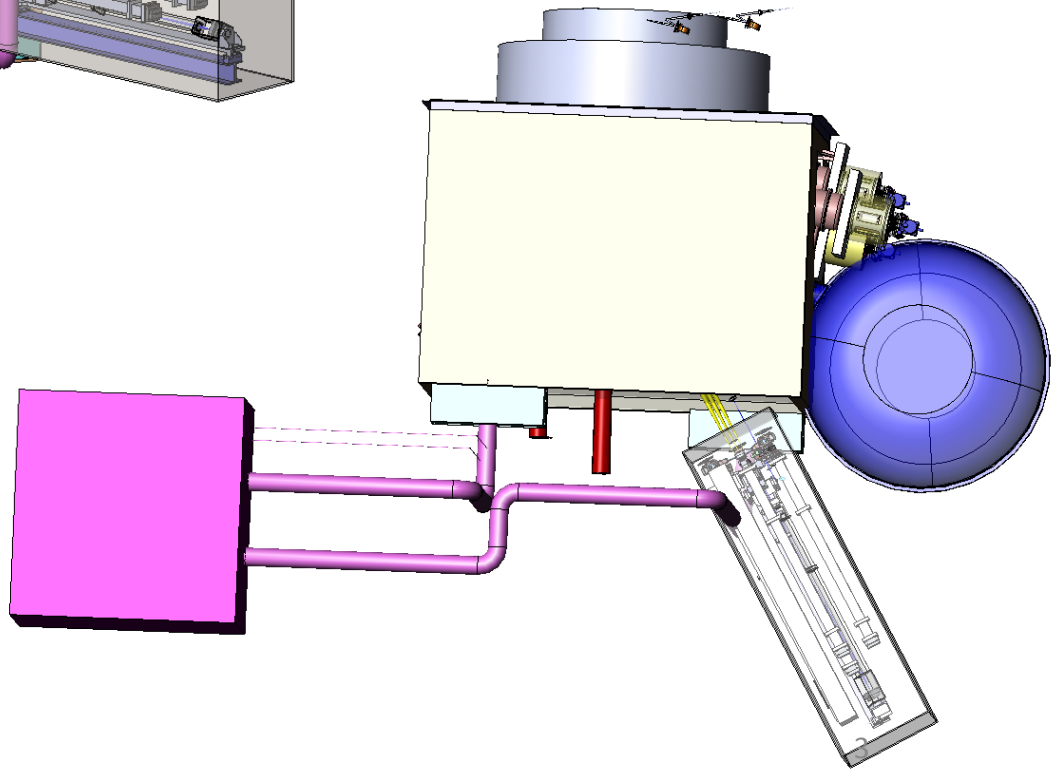

1.3) LGS within NGAO

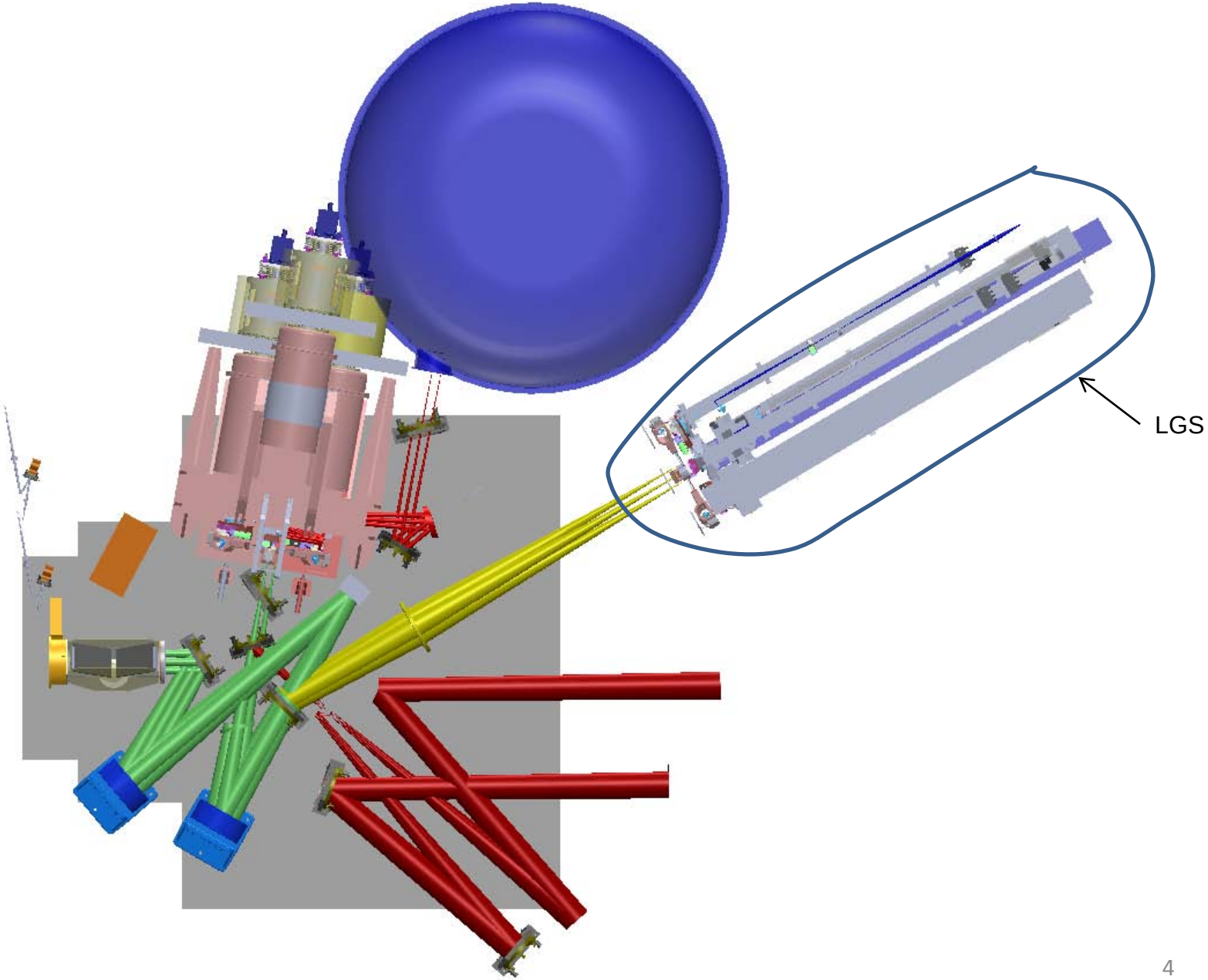

1.4) LGS OSM Overview

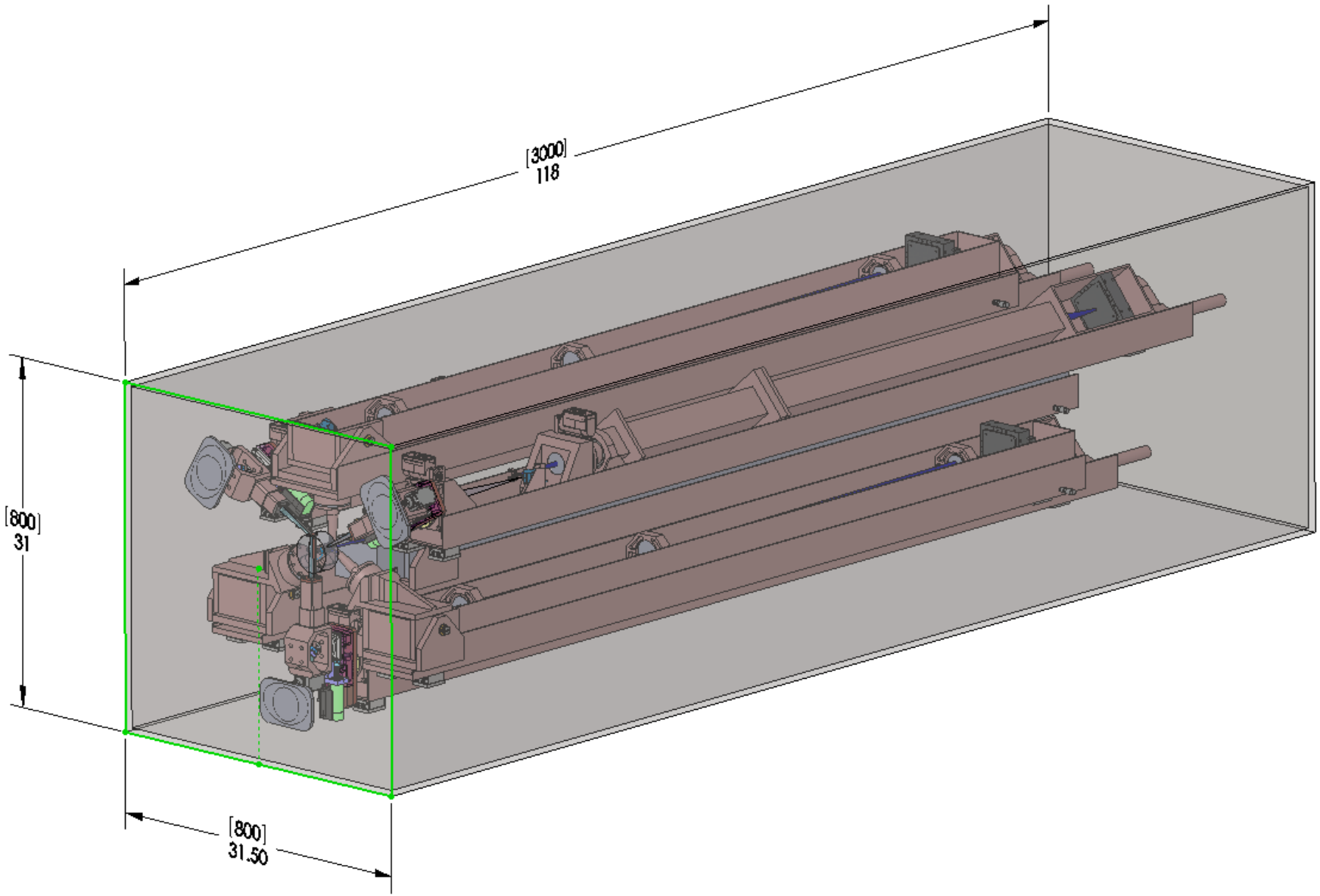

1.5) LGS OSM Overview, Front View

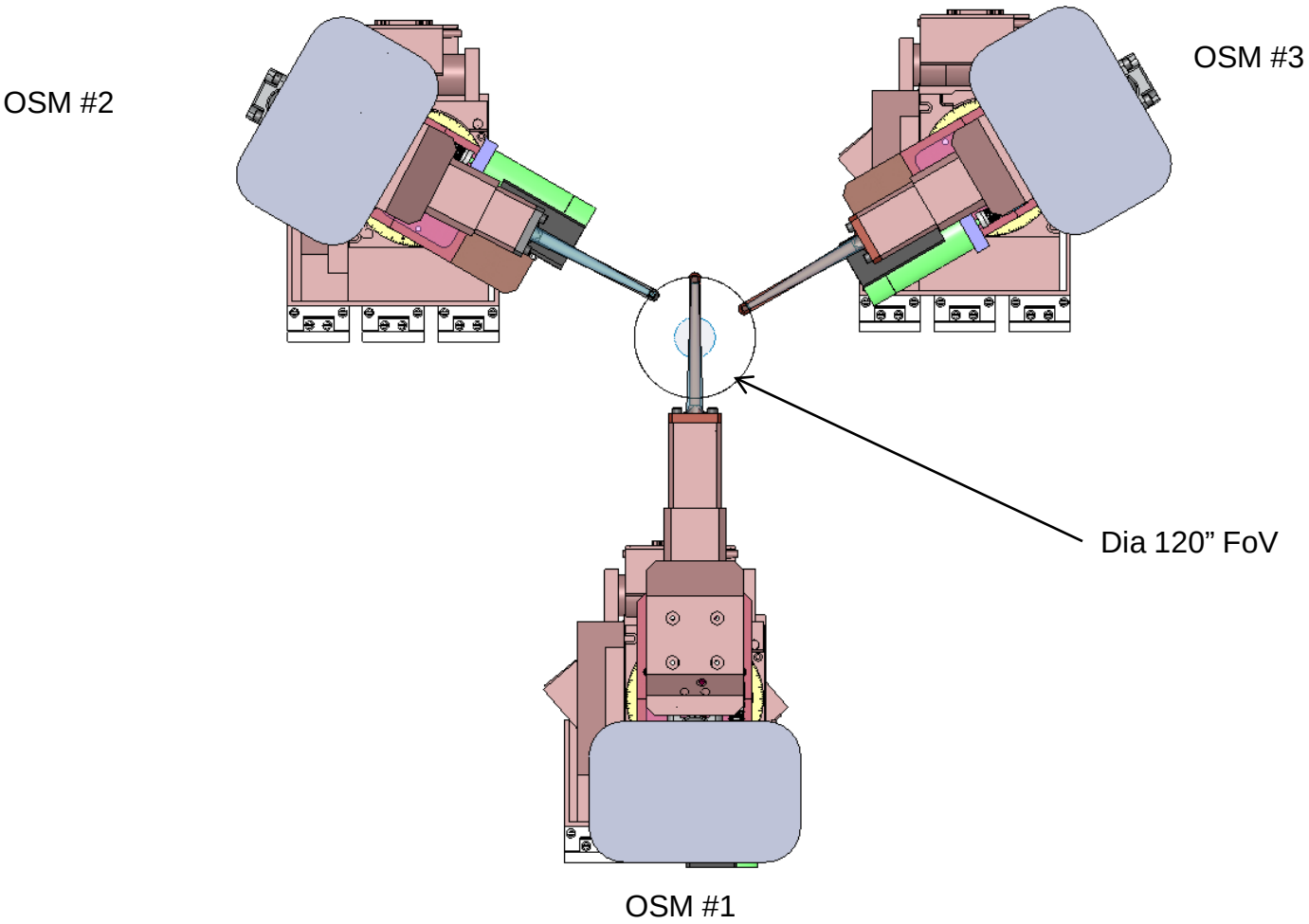

1.6) LGS Fixed Asterism, Front View (No adjustment mechanism shown)

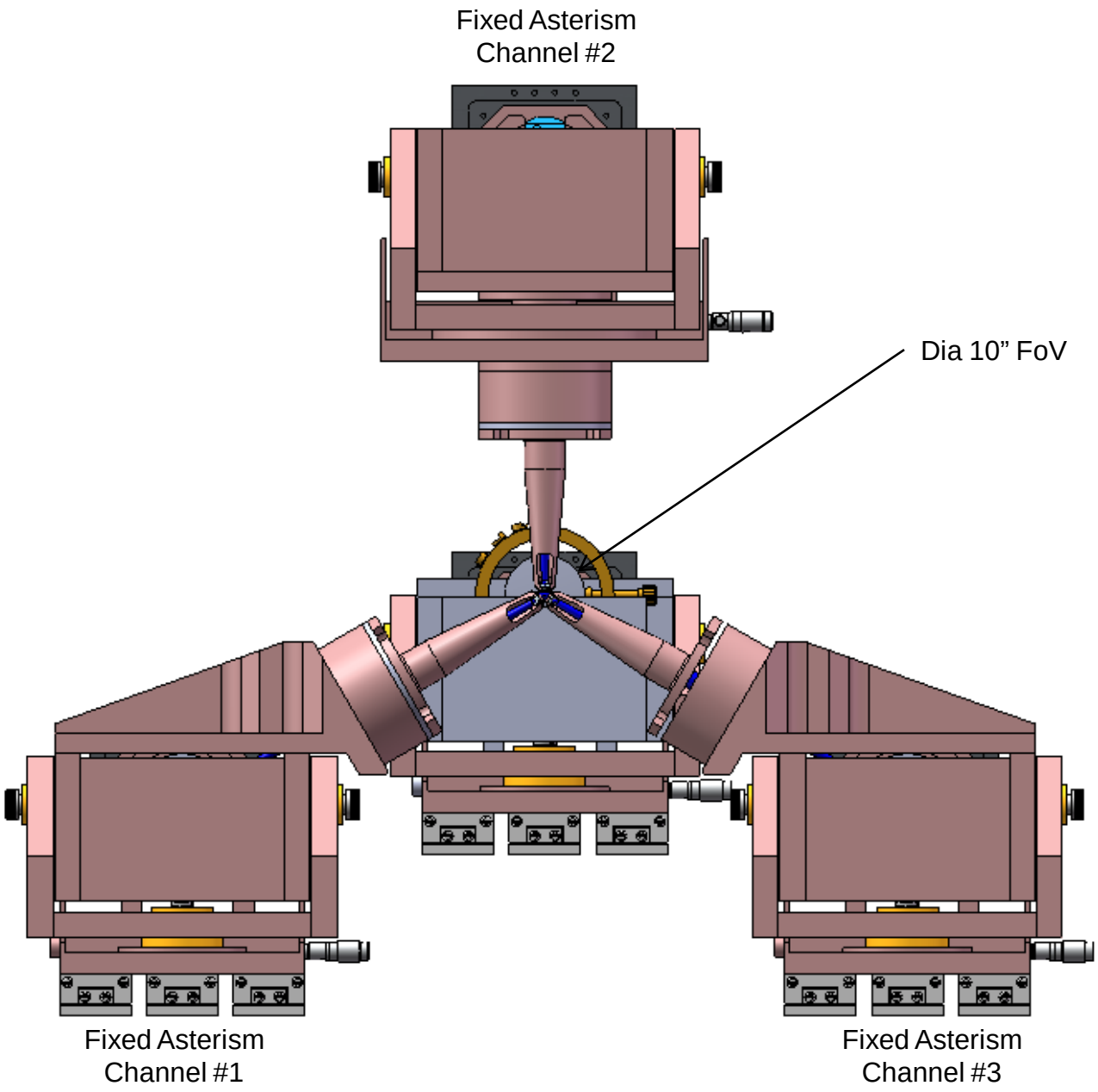

1.7) LGS Overview, Front View

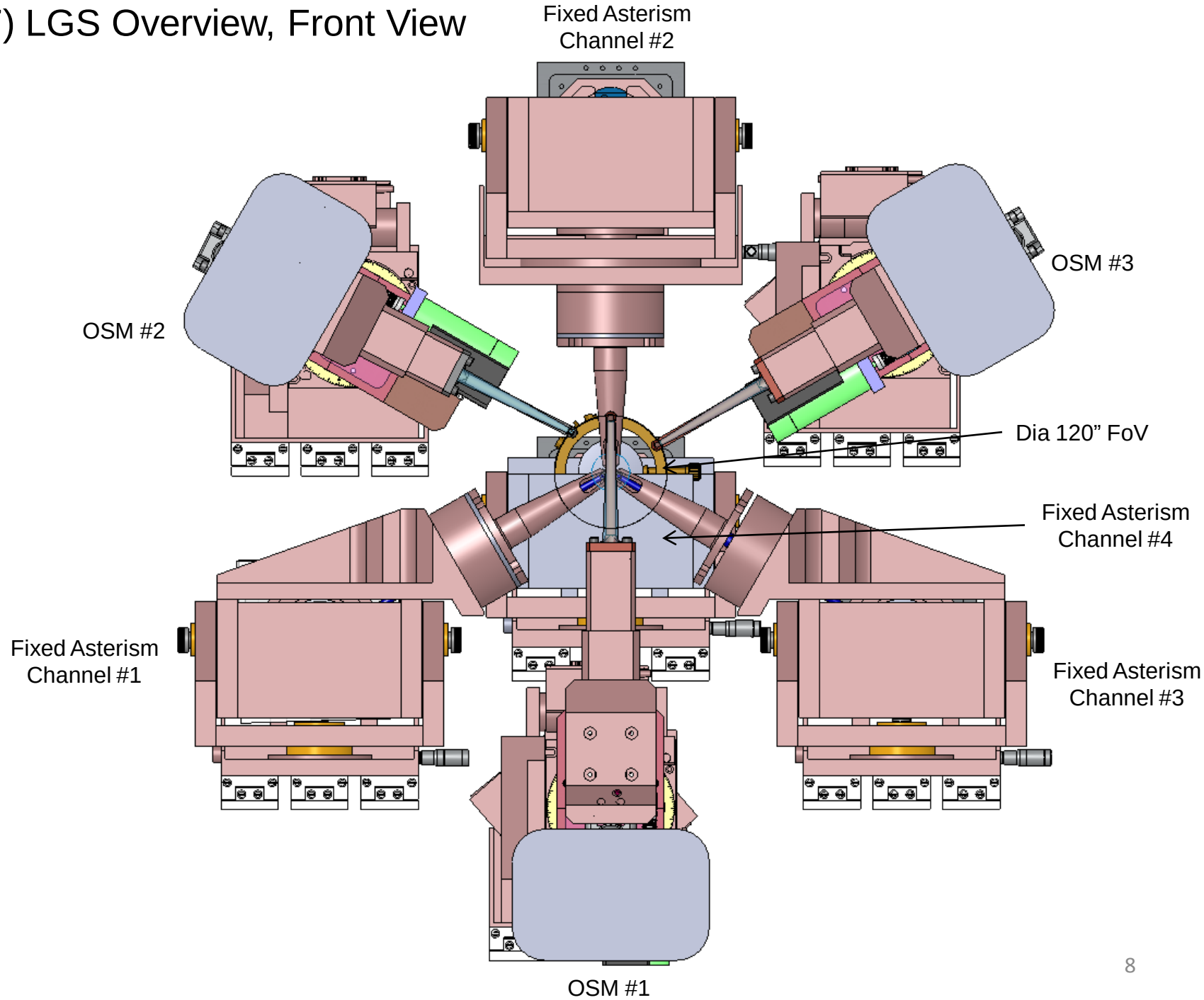

1.8) OSM Overall Layout

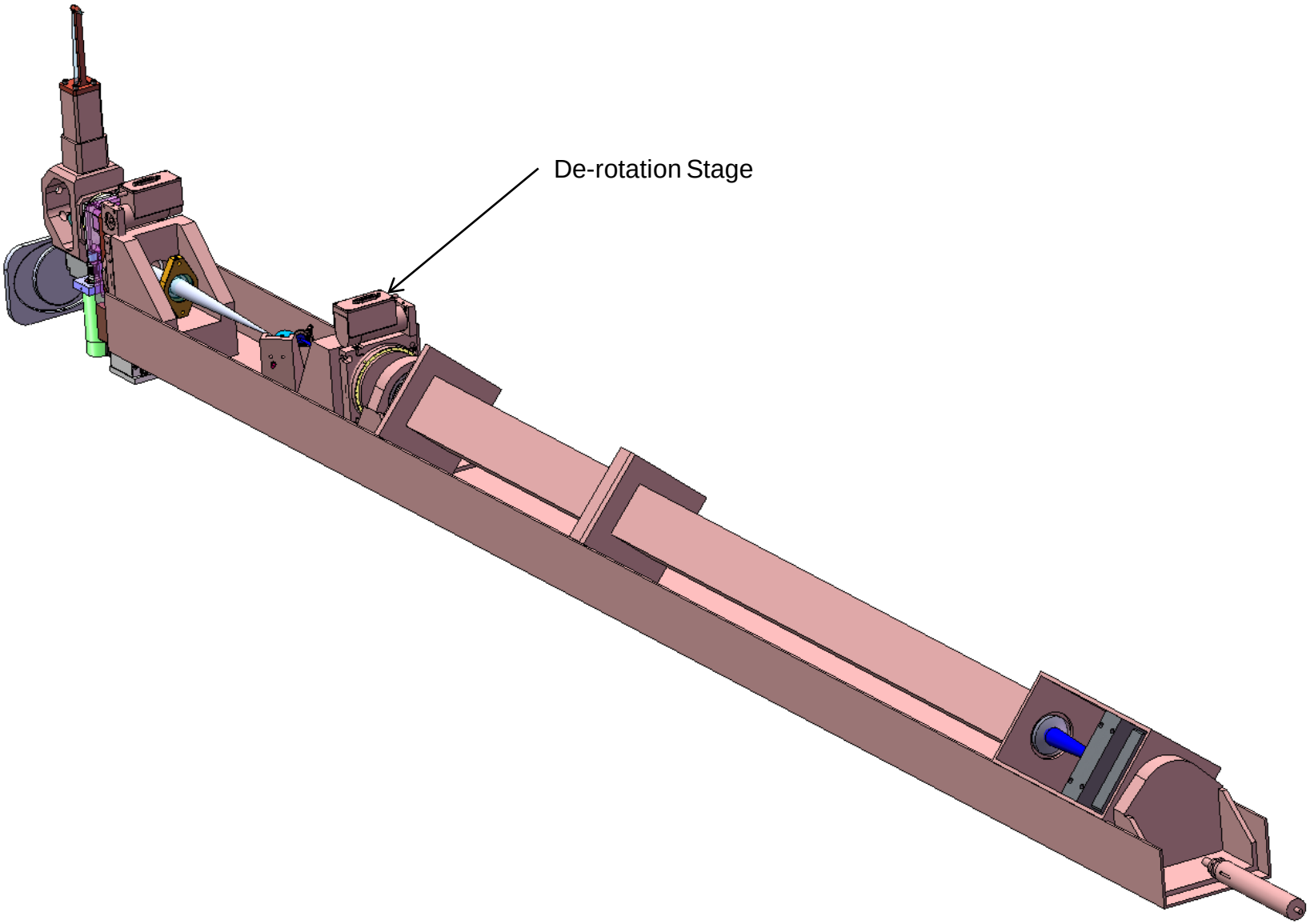

1.9) Fixed Asterism Channel Overall Layout

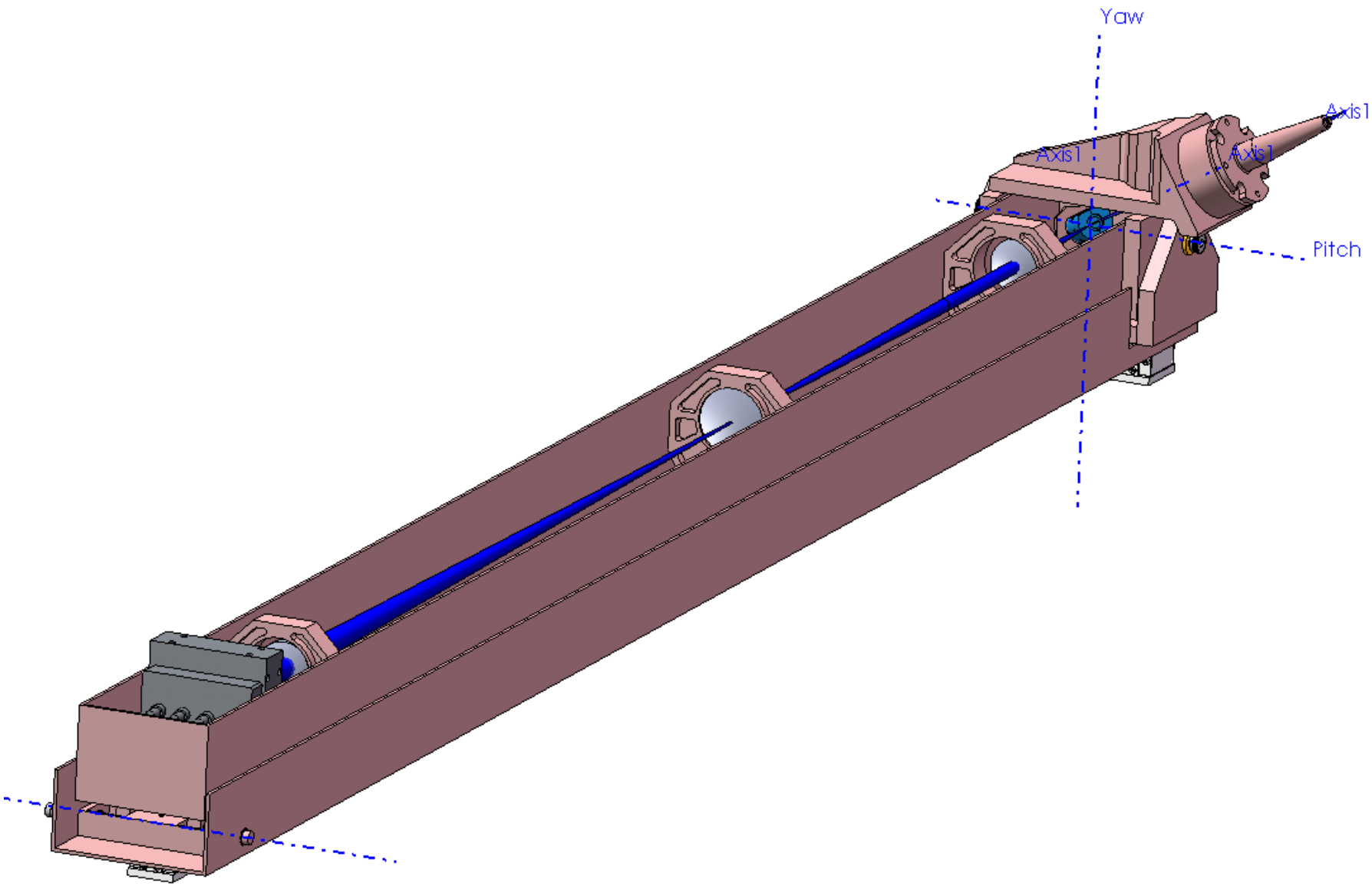

1.8) Standard Material Deflections

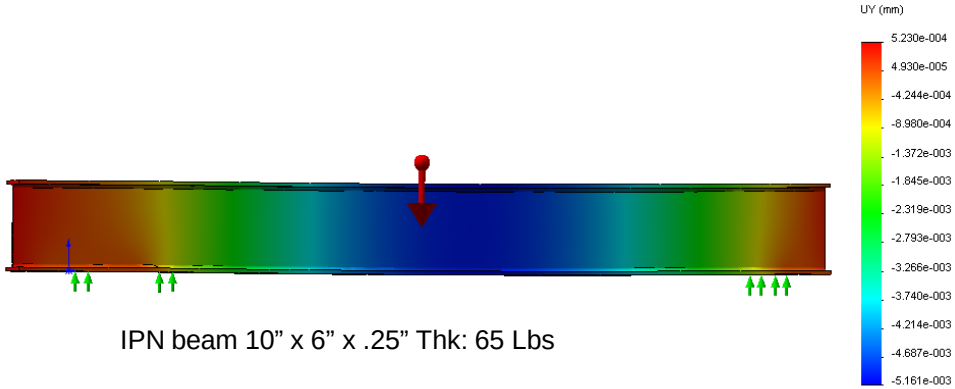

IPN beam 10” x 6” x .25” Thk: 65 Lbs

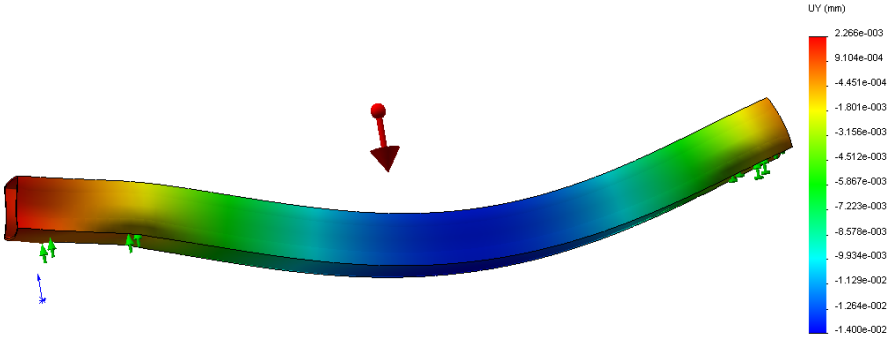

Square beam 6” x 6” x .125” Thk: 38.7 Lbs

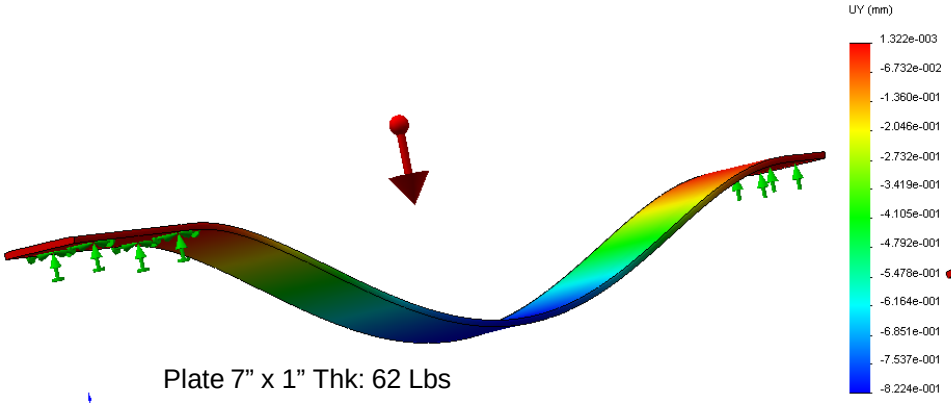

Plate 7” x 1” Thk: 62 Lbs

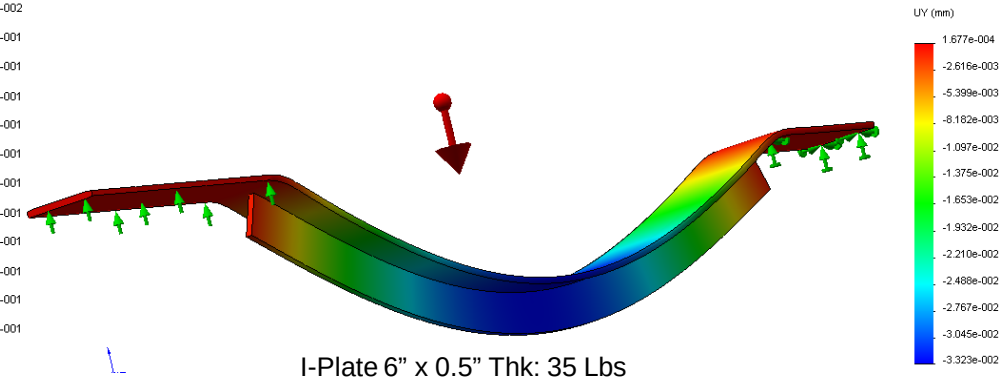

I-Plate 6” x 0.5” Thk: 35 Lbs

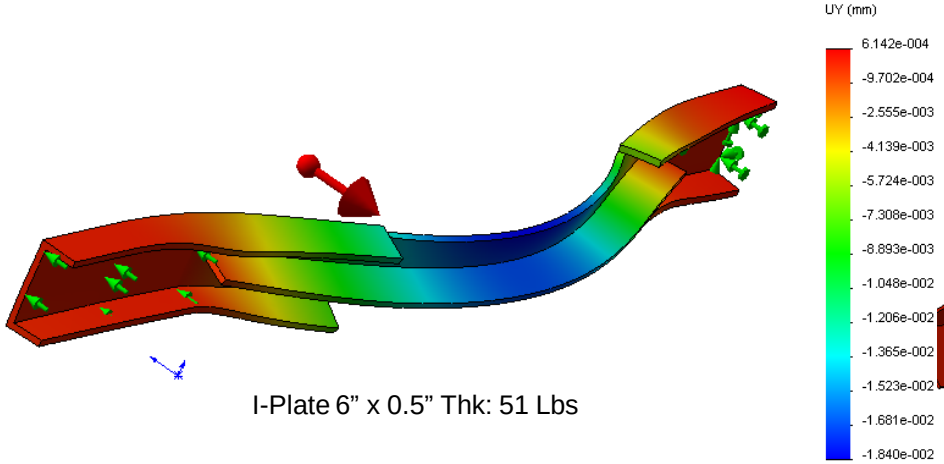

I-Plate 6” x 0.5” Thk: 51 Lbs

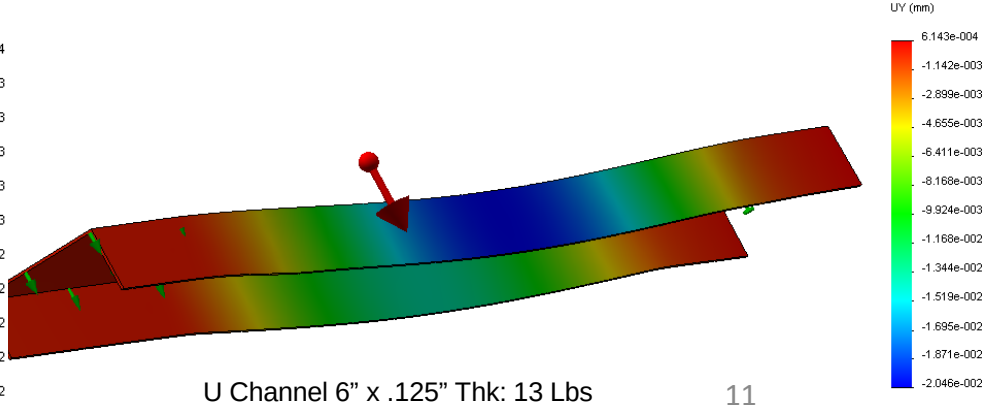

U Channel 6” x .125” Thk: 13 Lbs
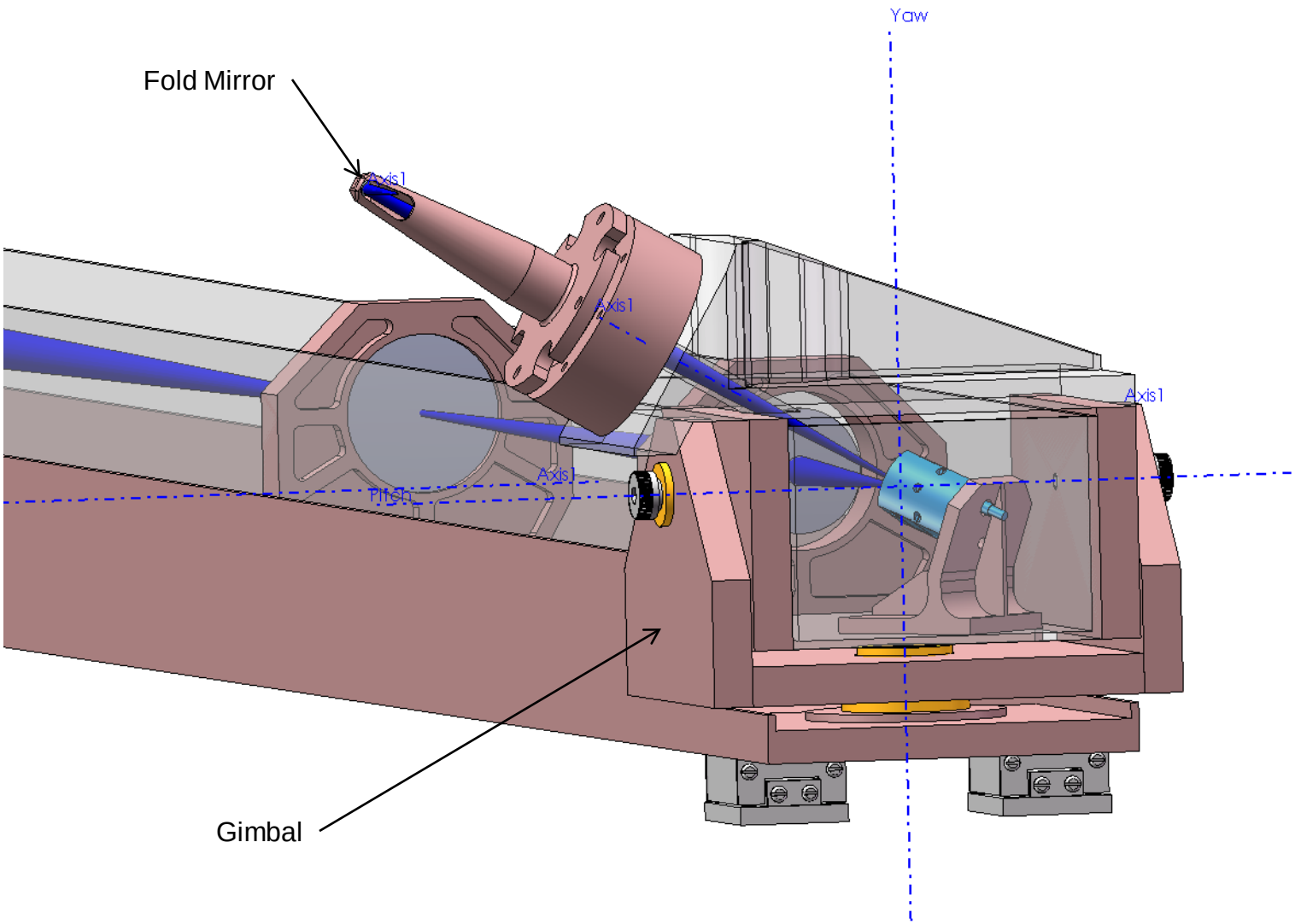
1.9) OSM Layout